2022

Development of patient-centered care scales of dentists in primary health care of Thailand: A multigroup analysis

Yutthana Khamnil
Faculty of Dentistry

Development of patient-centered care scales of dentists in primary health care of Thailand: A multigroup analysis

Mr. Yutthana Khamnil

A Dissertation Submitted in Partial Fulfillment of the Requirements
for the Degree of Doctor of Philosophy in Dental Public Health
Department of Community Dentistry
FACULTY OF DENTISTRY
Chulalongkorn University
Academic Year 2022

การพัฒนาเครื่องมือวัดการดูแลแบบยึดผู้ป่วยเป็นศูนย์กลางของทันตแพทย์ในระบบบริการปฐมภูมิในประเทศไทย: การวิเคราะห์กลุ่มพหุ

นายยุทธนา คำนิล

วิทยานิพนธ์นี้เป็นส่วนหนึ่งของการศึกษาตามหลักสูตรปริญญาวิทยาศาสตรดุษฎีบัณฑิต
สาขาวิชาทันตสาธารณสุข ภาควิชาทันตกรรมชุมชน
คณะทันตแพทยศาสตร์ จุฬาลงกรณ์มหาวิทยาลัย
ปีการศึกษา 2565

Thesis Title	Development of patient-centered care scales of dentists in primary health care of Thailand: A multigroup analysis
By	Mr. Yutthana Khamnil
Field of Study	Dental Public Health
Thesis Advisor	Associate Professor Pagaporn Pantuwadee Pisarnturakit, D.D.S., M.Sc., Dr.P.H.
Thesis Co Advisor	SURASAK KAO-IEAN, B.Ed., M.Ed., Ph.D.

Accepted by the FACULTY OF DENTISTRY, Chulalongkorn University in Partial Fulfillment of the Requirement for the Doctor of Philosophy

..... Dean of the FACULTY OF DENTISTRY

(Professor Pornchai Jansisyanont, D.D.S., M.S., Ph.D.)

DISSERTATION COMMITTEE

..... Chairman

(Yongyuth Pongsupap, M.D., M.P.H., Ph.D.)

..... Thesis Advisor

(Associate Professor Pagaporn Pantuwadee Pisarnturakit, D.D.S., M.Sc., Dr.P.H.)

..... Thesis Co-Advisor

(SURASAK KAO-IEAN, B.Ed., M.Ed., Ph.D.)

..... Examiner

(Associate Professor Neeracha Sanchavanakit, D.D.S., Ph.D.)

..... Examiner

(Associate Professor Palinee Detsomboonrut, D.D.S., M.Sc., Ph.D.)

..... Examiner

(NIPAPORN URWANNACHOTIMA, D.D.S., M.Ed., Ph.D.)

ยุทธนา คำนิล : การพัฒนาเครื่องมือวัดการดูแลแบบยึดผู้ป่วยเป็นศูนย์กลางของทันตแพทย์ในระบบบริการปฐมภูมิในประเทศไทย: การวิเคราะห์กลุ่มพหุ. (Development of patient-centered care scales of dentists in primary health care of Thailand: A multigroup analysis) อ.ที่ปรึกษาหลัก : รศ. ทพญ. ดร.ผกาภรณ์ พันธุวดี พิศาลธุรกิจ, อ.ที่ปรึกษาร่วม : ดร.สุรศักดิ์ เก้าเอี้ยน

วัตถุประสงค์: 1.เพื่อพัฒนาโครงสร้างแนวคิดการดูแลทางทันตกรรมแบบยึดผู้ป่วยเป็นศูนย์กลางสำหรับทันตแพทย์ในระบบบริการสุขภาพปฐมภูมิของประเทศไทย 2.สร้างเครื่องมือที่น่าเชื่อถือและมีความตรงในการวัดทั้งในมุมมองของทันตแพทย์ และของผู้ป่วย 3. ทดสอบความไม่แปรเปลี่ยนของการวัดของเครื่องมือทั้งสอง 4.ทดสอบผลกระทบของคุณลักษณะส่วนบุคคลของผู้ป่วยและทันตแพทย์ต่อระดับการดูแลแบบยึดผู้ป่วยเป็นศูนย์กลาง *วัสดุและวิธีการ:* แบ่งเป็น 2 ระยะ ในระยะที่ 1 สร้างแบบสอบถามขึ้นจากการทบทวนวรรณกรรม การสัมภาษณ์เชิงลึก ตรวจสอบความตรงตามเนื้อหา การสัมภาษณ์ การทดสอบก่อนใช้ วิเคราะห์ปัจจัย (Exploratory Factor Analysis: EFA) ระยะที่ 2 วิเคราะห์องค์ประกอบเชิงยืนยัน (Confirmatory Factor Analysis: CFA) การประเมินความเชื่อมั่น และการทดสอบความไม่แปรเปลี่ยนของโมเดลการวัดระหว่างโรงพยาบาลชุมชนขนาดใหญ่และขนาดเล็ก กลุ่มตัวอย่างได้แก่ผู้ป่วยทางทันตกรรมและทันตแพทย์ในโรงพยาบาลชุมชนทั่วประเทศ ใช้การสุ่มตัวอย่างหลายขั้นตอน และแยกข้อมูลเป็นสองกลุ่มเพื่อวิเคราะห์ EFA และ CFA นอกจากนี้ยังทำวิเคราะห์การถดถอยเชิงเส้น เพื่อตรวจสอบผลของคุณสมบัติส่วนบุคคลของทันตแพทย์และผู้ป่วยต่อระดับการดูแลแบบยึดผู้ป่วยเป็นศูนย์กลาง และทำ Test-retest ของเครื่องมือในกลุ่มตัวอย่างทั้งสองห่างกัน 1 สัปดาห์ *ผลการวิจัย:* การศึกษาในระยะที่ 1 พบว่าการดูแลผู้ป่วยทันตกรรมแบบยึดผู้ป่วยเป็นศูนย์กลาง มี 12 องค์ประกอบ แบบสอบถามที่สร้างได้แก่ "แบบสอบถามการดูแลผู้ป่วยทันตกรรมแบบยึดผู้ป่วยเป็นศูนย์กลางของทันตแพทย์-ฉบับสำหรับผู้รับบริการ" วิเคราะห์ EFA พบว่ามี 42 ข้อ ใน 7 องค์ประกอบ ได้แก่ ความสัมพันธ์ระหว่างทันตแพทย์และผู้ป่วย การวินิจฉัยแยกโรคและความเจ็บป่วย การดูแลแบบผสมผสาน การสื่อสาร การให้ข้อมูลและร่วมตัดสินใจการรักษา การดูแลแบบองค์รวม และ ความเห็นอกเห็นใจและการจัดการความวิตกกังวล การวิเคราะห์ CFA พบว่าโมเดลมีความสอดคล้องกับข้อมูลเชิงประจักษ์ ($\chi2$= 10.113, $\chi2$/df = 1.448, df=7, p=.181, CFI=.999, TLI=.998, RMSEA=.020) การทดสอบความไม่แปรเปลี่ยนพบว่าโมเดลการวัดมีระดับความไม่แปรเปลี่ยน metric invariance พบมีความเชื่อมั่นดีมาก เครื่องมือชิ้นที่สองคือ "แบบสอบถามการดูแลผู้ป่วยแบบยึดผู้ป่วยเป็นศูนย์กลางของทันตแพทย์ ฉบับทันตแพทย์" การวิเคราะห์ EFA พบว่ามี 36 ข้อ ใน 7 องค์ประกอบ เช่นเดียวกัน เมื่อวิเคราะห์ CFA พบว่าโมเดลมีความสอดคล้องกับข้อมูลเชิงประจักษ์ ($\chi2$= 10.770, $\chi2$/df = 1.346, df=8, p=.215, CFI=.998, TLI=.996, RMSEA=.021). การทดสอบความไม่แปรเปลี่ยนพบว่าโมเดลการวัดมีระดับความไม่แปรเปลี่ยน residual invariance พบมีความเชื่อมั่นดีมาก การวิเคราะห์ปัจจัยที่มีอิทธิพลต่อระดับการรับรู้การดูแลผู้ป่วยทางทันตกรรมของผู้ป่วย พบว่าขนาดโรงพยาบาลมีอิทธิพลต่อระดับการรับรู้การรับรู้ต่อการดูแลผู้ป่วยทันตกรรมแบบยึดผู้ป่วยเป็นศูนย์กลางของทันตแพทย์ (β = 0.999, p < 0.015) จำนวนครั้งที่ไปรับบริการทันตกรรมภายในระยะเวลา 24 เดือนเป็นตัวทำนายที่สำคัญของ P-PCCD (β = 1.364, p < 0.003) นอกจากนี้ทันตแพทย์ที่หมุนเวียนไปให้บริการที่หน่วยบริการปฐมภูมิ 1-3 ครั้งต่อสัปดาห์มีอิทธิพลต่อระดับของการดูแลผู้ป่วยแบบยึดผู้ป่วยเป็นศูนย์กลางของทันตแพทย์อย่างมีนัยสำคัญ (β = 2.863, p < 0.001) *สรุป:* การพัฒนาแนวคิดการดูแลผู้ป่วยแบบยึดผู้ป่วยเป็นศูนย์กลางของทันตแพทย์ในระบบสุขภาพปฐมภูมิของประเทศไทยพบมี 7 องค์ประกอบ โดยใน ฉบับผู้รับบริการ มี 42 ข้อ และ ฉบับทันตแพทย์ มี 36 ข้อ พบความเชื่อมั่นและความตรงในระดับดีมาก ขนาดโรงพยาบาลและจำนวนครั้งที่ไปรับบริการส่งผลต่อระดับการรับรู้ดูแลผู้ป่วยแบบยึดผู้ป่วยเป็นศูนย์กลางของทันตแพทย์ และการหมุนเวียนของทันตแพทย์ไปให้บริการในหน่วยบริการปฐมภูมิมีผลต่อระดับการให้บริการแบบยึดผู้ป่วยเป็นศูนย์กลางของทันตแพทย์อีกด้วย

สาขาวิชา	ทันตสาธารณสุข	ลายมือชื่อนิสิต .....
ปีการศึกษา	2565	ลายมือชื่อ อ.ที่ปรึกษาหลัก .....
		ลายมือชื่อ อ.ที่ปรึกษาร่วม .....

6278801632 : MAJOR DENTAL PUBLIC HEALTH

KEYWORD: Confirmatory factor analysis Exploratory factor analysis Measurement invariance Patient-centered dental care Patient perception Primary care.

Yutthana Khamnil : Development of patient-centered care scales of dentists in primary health care of Thailand: A multigroup analysis. Advisor: Assoc. Prof. Pagaporn Pantuwadee Pisarnturakit, D.D.S., M.Sc., Dr.P.H. Co-advisor: SURASAK KAO-IEAN, B.Ed., M.Ed., Ph.D.

Purposes: 1. to develop a conceptual construct of patient-centered dental care for primary care dentists in Thailand. 2. to create reliable and valid instruments to measure patient-centered care from both the patient's and dentist's perspectives. 3. to test the measurement invariance of the two scales 4. To examine the effect of personal attributes of patients and dentists on the level of patient-centered care. *Materials and Methods:* In Phase 1, preliminary questionnaires were developed through a comprehensive process involving a literature review, in-depth interviews, content validity tests, cognitive interviews, and pre-tests. Exploratory factor analysis (EFA) was used to identify the constructs. In phase 2, confirmatory factor analysis (CFA) was performed. The reliability of the instruments was tested. A multi-group analysis was conducted to test measurement invariance between large and small community hospitals. Additionally, multiple linear regression was performed to examine the effect of personal attributes on the level of patient-centered care. The two newly developed tool were administered to test-retest reliability with a one-week interval A multistage sampling strategy was employed to recruit dental patients and dentists from community hospitals across Thailand. Self-administered questionnaires were utilized, and the response data were divided for EFA and CFA. *Results:* The analysis of the interviews yielded 12 attributes. The Patient-Centered Care of Dentist Scale (PCCDS-P Version) underwent validation through EFA and CFA ($\chi 2$= 10.113, $\chi 2$/df = 1.448, df=7, p=.181, CFI=.999, TLI=.998, RMSEA=.020). The final scale consisted of 42 items across seven domains: dentist-patient relationship, disease-illness, integrated care, communication, shared information and decision-making, holistic care, and empathy and anxiety management. The findings indicated that the scale was metric measurement invariant across patient groups. The second instrument developed, the Patient-Centered Care of Dentist Scale (PCCDS-D version), also underwent validation through EFA and CFA ($\chi 2$= 10.770, $\chi 2$/df = 1.346, df=8, p=.215, CFI=.998, TLI=.996, RMSEA=.021). This scale consisted of 36 items across the same seven domains as the PCCDS-P version. The findings indicated residual invariance across dentist groups. The scales exhibited excellent reliability and stability. The analysis revealed significant effects of hospital size on PCCD-P version (β = 0.999, $p < 0.015$) Additionally, the number of dental visits within 24 months emerged as a significant predictor of P-PCCD (β = 1.364, $p < 0.003$). Dentists who rotated to primary care units 1-3 times per week exhibited a significant effect on PCCD-D version (β = 2.863, $p < 0.001$). *Conclusions:* This study provides evidence that the newly developed P-PCCDS, consisting of seven domains and 42 items, and the PCCDS, consisting of seven domains and 36 items, demonstrate excellent reliability and validity. The PCCDS-P version was metric invariance, and the PCCDS-D version was residual invariance. The study demonstrated that hospital size and the frequency of dental visits significantly affect the level of patient perception of PCCD. Additionally, the rotation of dentists to primary care units showed a significant effect on the level of PCCD. Overall, this comprehensive study contributes to the understanding and implementation of patient-centered dental care in primary care dentistry in Thailand.

Field of Study:	Dental Public Health	Student's Signature .....
Academic Year:	2022	Advisor's Signature .....
		Co-advisor's Signature .....

ACKNOWLEDGEMENTS

I want to express my most profound appreciation to Associate Professor Dr. Patita Bhuridej, Associate Professor Dr. Palinee Detsomboonrat, and Dr. Nipaporn Urwannachotima for their expertise in enhancing my academic knowledge and their kind care throughout my Ph.D. life.

I am grateful for the assistance provided by the administrative staff in the Community Dentistry Department and the office of the Faculty of Dentistry.

Lastly, I am grateful for my wife, Khanittha Phithakthon, and my daughter, Ramida Phithakthon. They have been my best friend and great companion, lovingly supporting and assisting me most positively.

Yutthana Khamnil

TABLE OF CONTENTS

Page

ABSTRACT (THAI) iii

ABSTRACT (ENGLISH) iv

ACKNOWLEDGEMENTS v

TABLE OF CONTENTS vi

LIST OF TABLES xi

LIST OF FIGURES xiv

Chapter I 14

Introduction 14

Background and rationale 14

Research question 21

Research Objectives 21

Research Hypothesis 22

Scope of Research 23

Operational definition 23

Benefit from research 28

Research Design 28

Ethical Considerations 28

Chapter II 29

Review literature and related research 29

1. Patient-centered care 29

1.1. Concept and important of patient-centered in health care 29

1.2. Concept and model of patient-centered care in dentistry 53

1.3. Patient-centered care in Thailand 92

2. Measurement of patient-centered care 110

3. Primary dental health care in Thailand 125

4. Factor analysis.....130

5. Multigroup Analysis and measurement invariance.....135

Chapter III.....143

Methodology 143

Population.....145

Sample and sample size.....145

PHASE I.....150

PHASE II.....173

Chapter IV.....179

Results.....179

1. PHASE I.....180

1.1. The conceptual construction of patient-centered dental care for primary care dentists in Thailand. 180

1.2. Exploratory factor analysis (EFA).....190

2. PHASE II 211

2.1. The patient perception of patient-centered care of dentist scale (PCCDS-P version) 211

2.2. The patient-centered care of dentist scale (PCCDS-D version) 222

The final structure of the scales.....234

Scoring and interpretation of the scales 235

Chapter V 237

Discussion 237

Objective 1. To specify the definition and component of patient-centered dental care in primary health care of Thailand. 237

Objective 2 To develop the two patient-centered care of dentist in primary care scales 2.1) the patient perception of patient-centered care of dentist scale (PCCDS-P version) 2.2) patient-centered care of dentist scale (PCCDS-D version) 243

Objective 3 To test the measurement invariance of the two scales. 243

1. Patient-perception of patient-centered care of dentist scale (PCCDS-P version) 243

2 Patient-centered care of dentist scale (PCCDS-D version) 250

Objective 4. To test the effect of personal attributes of patient and dentist to the level of patient-centered care. 255

2.1.1 Effect of patient personal attributes to the patient perception of patient-centered care of dentist (PCCDS-P version) 256

2.1.2 Effect of dentists' personal attributes to the patient-centered care of dentists (PCCDS-D version). 257

The discussion of the two scales 258

Implication for dental public health knowledge 263

Implication for dental practice 265

Implication for dental care service system 265

Recommendation for future research 266

Chapter VI 268

Conclusion 268

REFERENCES 270

Appendix A-1 298

Semi-structure question for expert in-depth interview 298

Appendix A-2.....299

Semi-structure question for patient in-depth interview.....299

Appendix B-1 300

61 Initial 61-Item of PCCDS-P version based on 12 operation definitions and some existing instruments. 300

Appendix B-2 312

Initial 66-Item of PCCDS-D version based on 12 operation definitions and some existing instruments. 312

Appendix C-1 325

Patient perception of patient-centered care of dentist in primary care questionnaires (Preliminary) 325

Appendix C-2 332

Patient-centered care of dentist in primary care questionnaires (Preliminary) 332

Appendix D 340

Distribution of participants 340

Appendix E 344

EFA output.....344

Appendix F.....348

Assumption tests for CFA and measurement invariance test 348

Appendix G.....361

Assumption tests for Multiple Linear Regression analysis.....361

Appendix H-1.....364

Patient-Centered Care of Dentist Scale (PCCDS-P version) 364

Appendix H-2 371

Patient-Centered Care of Dentist Scale (PCCDS-D version) 371

Appendix I 377

List of the experts for content validity test. 377

VITA 378

LIST OF TABLES

Page

Table 1 Literature review of patient/person centered care concept and model in dental care from year 2000 - 2020 84

Table 2 Concepts and model finding from nine literatures categorized by clinical encounter, interpersonal communications, and structure/management. 90

Table 3 Crosstab between authors and domain from nine studies of patient/person centered care model in dentistry.....92

Table 4 Examples of validated tools used to measure person-centered care have used in dental care 116

Table 5 Examples of questions in existing instrument measuring patient-centered care or relevant domain of patient-centered dental care 118

Table 6 Characteristics of participants in in-depth interviews.....151

Table 7 Example questions in questionnaire for dentists.....159

Table 8 Example questions in questionnaire for patients. 159

Table 9 Structure and specification of the initial items of PCCDS-P version and PCCDS-D version).....160

Table 10 I-CVI score and correction of items of PCCDS-P version after content evaluation and cognitive interviews. 162

Table 11 I-CVI score and correction of items of PCCDS-D version after content evaluation and cognitive interviews. 163

Table 12 Inter-Item Correlation Matrix, Corrected Item-Total Correlation and 165

Table 13 Inter-Item Correlation Matrix, Corrected Item-Total Correlation and Cronbach's alpha 168

Table 14 Dependent and independents variables in MRA.....177

Table 15 Patient-centered care of dentists in primary health care domains.....182

Table 16 Characteristics of the EFA and CFA sample, Total N = 1,503. 191

Table 17 Descriptive statistics of each statements for EFA (N=336).....192

Table 18 Factor loading, % of variance and Cumulative % of variance of the 42-item PCCDS-P version.....197

Table 19 Internal consistency of the PCCDS-P version with 336 patients' data as estimated by Cronbach's alpha.....200

Table 20 Characteristics of the EFA and CFA of dentist sample, Total N = 1,059. 201

Table 21 Descriptive of survey 305 dentists' data for EFA.....202

Table 22 Factor loading, % of variance and Cumulative % of variance of the 36-item PCCDS-D version.....207

Table 23 Internal consistency of the PCCDS-D version with 305 dentists' data as estimated by Cronbach's alpha.....209

Table 24 Mean, SD, Factor Loading, R^2, AVE, and CR of the PCCDS-P version measurement model.....212

Table 25 Characteristics of the patient samples in small and large hospitals for multigroup analysis, Total N = 1,167. 215

Table 26 CFA models and measurement invariance tests of PCCD-P version model. 218

Table 27 Internal consistency of PCCDS-P version of 1,167 patients' data 219

Table 28 Intraclass Correlation Coefficient of PCCDS-P version.....220

Table 29 MRA model and coefficients of patient perception of PCC of dentist.....221

Table 30 Mean, SD, Factor Loading, R^2, AVE, and CR of the PCCDS-D version measurement model.....225

Table 31 Characteristics of the dentist sample in small and large hospitals for multigroup analysis, Total N = 754 227

Table 32 CFA models and measurement invariance test of PCCDS-D version model. 229

Table 33 Internal consistency of PCCDS-D version of 754 dentists' data 231

Table 34 Intraclass Correlation Coefficient of PCCDS-D version. 232

Table 35 MRA model and coefficients of the level of PCC of dentists.....233

Table 36 The structure of PCCDS– P Version. 234

Table 37 The structure of PCCDS– D Version. 235

LIST OF FIGURES

Page

Figure 1 Phase 1 Conceptual Framework 25

Figure 2 Phase 2.1 Conceptual framework of invariance test of dentist self –assessment measurement model 26

Figure 3 Phase 2.2 Conceptual framework of invariance test of patient perception measurement model.....26

Figure 4 Phase 2.3 Conceptual framework: Test the effect of dentist personals attributes to 27

Figure 5 Phase 2.4 Conceptual framework: Test the effect of patient personals attributes to patient perception of patient-centered care. 27

Figure 6 Holistic perception and patient understanding diagram of Kulich et al 55

Figure 7 Scamber's model of person-centered care model in dentistry 64

Figure 8 Person-centred model in dentistry by Apelian N. 67

Figure 9 Person-centred care model in dentistry -the patient's perspective by Mills I. et al.....72

Figure 10 Person-centred dental care model by Noushi N. et al.....73

Figure 11 Patient-centered dental home 4 level framework with example. 77

Figure 12 Research flowchart 144

Figure 13 Sampling for patient participation 148

Figure 14 Scree plot generated in Jamovi software for 42-item PCCDS-P version. 196

Figure 15 PCCDS-P version structure model with 42 items 7 factors.....199

Figure 16 Scree Plot generated in Jamovi software for 36-item PCCDS-D version 207

Figure 17 PCCDS-D Version measurement model with 36 items 7 factors.....210

Figure 18 Initial measurement model of the PCCDS-P version 213

Figure 19 Final modified measurement model of the PCCDS-P version 213

Figure 20 Initial measurement model of PCCDS-D version 224

Figure 21 Final measurement model of PCCDS-D version.....224

Figure 22 Patient-centered care model from qualitative study. 241

Chapter I

Introduction

Background and rationale

Patient-centered care become one of the most concerning issues in health care globally. Almost of health professions place emphasis on holistic and patient-centered care, such as doctors, nurses, pharmacists, physical therapists, as well as dentists(1-12) . Most of these healthcare professions developed their patient-centered care model, but models have yet to be accepted. Since ever, M. Balint and E Balint 1969 (13) proposed that physicians should do more than just a physical examination, diagnosis, and treatment of the abnormal organs or functions, which is called "illness-oriented. ” But should diagnose and examine the patient's history wholly personally to understand all the conditions related to the patient, which is called “patient-centered. This principle has been increasingly widespread in many health education and practices especially in general or family medicine, from that time until the present.

Patient-centered and person-centered can be used interchangeably because they have similar meanings, although some differences exist (14, 15). Health professionals are more prone to interpret this term as communication between patient and professional in the clinical encounter. At the same time, middle-level management is likely understanding as a quality assurance measure. On the other hand, non-professional group views person-centered as a social or whole- person model of health(15). Good communication between the doctor and the patient at the clinical encounter results in understanding the treatment process. Good

communication allows the patient to follow the treatment guidelines and processes, which may increase their satisfaction and improve the treatment outcome. While problematic communication may result in the treatment being mismatched as planned, then bring about a misunderstanding between the doctor and the patient, eventually making it inadequate to meet the patient's needs (7, 16-19). In the United States, the patient-centered medical home program has been evolving for over 50 years, aiming to increase access to primary care services in the prospective population with a patient-centered approach, especially for maternity care and among people with chronic diseases such as diabetes and hypertension. Relevant professional groups are intense to focus on delivering patient-centered services where communication skill is essential. Healthcare providers and professionals must enhance their patient-centered communication skills(16).

A similar concept emerged around 2000 in WHO report(20). In the context of a system, responsiveness refers to the result obtained when institutions and their relationships are structured in a manner that acknowledges and addresses the universally justified expectations of individuals. It can be seen from two perspectives. Firstly, the healthcare system user is commonly seen as a consumer, and enhanced responsiveness is seen as a way to attract consumers. Secondly, responsiveness is connected to ensuring that patients' rights to sufficient and timely care are protected (21). In 2001, The Institute of Medicine proposed six improvement aims : safe, effective, efficient, timely, equitable and patient-centered(22). Many health systems, such as UK's National Health Services (NHS). The UK national institute of

Clinical Excellent launched the guidelines in 2012 to improve the care experience for people using adult NHS services aiming to be more patient-centered(23). Additionally, health and public health institutions and health research institutes around the world have adopted patient-centered concepts in improving the quality of care, such as the Picker's Institute, the Australian Commission on Safety and Quality in Healthcare, Department of Health: England, university of Iowa: Public policy center, American Dental Association (ADA), etc.(24-30)

In dentistry, the literature review found several scholars have been studied and proposed the patient-centered or person-centered care models in dentistry which still uncertain(10-12, 23, 26, 31-34). In 2008, the American Dental Education Association (ADEA) proposed the six competencies for new general dentists for American dental schools to promote change and innovation in predoctoral dental school curricula(35). One of the six competency dimensions is communication and interpersonal skill, which mentioned that the graduate must apply psychosocial and behavioral principles in patient-centered health care(35). Poor communication between dentist and patient could lead to a dentist's ethical lawsuit. The study in Thailand found that almost 50 percent of the Dental Ethics Litigation of the Dental Council of Thailand 2002-2019 come from dentist behavior due to poor communication, ignorance, impolite and disrespectful dignity of people(36). A study of all dental prosecutions recorded from 2009 to 2012 in the eastern province of Saudi Arabia concluded that most oral surgery cases can be prevented by preoperative measures or by addressing the effects of surgical errors through good relations and patient communication(37). It was also found that dentists'

listening skills were still problematic(38), and numerous studies have shown that the degree of empathy for patients declined as the school year was higher(38-44).

The American dental association (ADA) has related patient-centered care and oral health care to 4 issues: improve chronic oral disease treatment and management, improve patient adherence, safety, and cost containment(28). The UK's NHS set the Dental Quality and Outcomes Framework (DQOF) for monitoring and measuring dentists' work performance and clinical outcomes. The patient experience indicators were a fundamental part of DQOF in dental care and were essential for delivering patient-centered services(30, 45). These indicators focused on service satisfaction, communication, and dental office's atmosphere. Several patient-report experience measures (PREM) and patient-report outcome measures(PROM) questionnaires adopted for dental services evaluation asking about the way that dentists communicate to their patients and/or family members such as Customer Assessment of Health Provider and System(CAHPS)(46), Patient-Practitioner Orientation Scale(PPOS)(47), Consultation and Relational Empathy measurement (CARE) Dental Visit Satisfaction Scale (DVSS)(48, 49), Dental Care Satisfaction Scale(DCS), Dentist Trust Scale(DTS)(50) etc. Even if many instruments are adopted in dentistry, however, no instrument was used to evaluate patient-centered care which can be compatible directly with dental services.

In Thailand, patient-centered or person-centered care has been evolving for over three decades, along with the introduction of family medicine in the 1980s(51). However, patient-

centered care is a valuable concept for improving the quality of care. Obstacles exist while implementing this concept for patient and healthcare providers(52), which makes the patient less involved and is associated with insufficient knowledge and understanding of the illness(53, 54). It also relates to patient attitudes in care and relationship with healthcare providers, patient inadequacy, lack of confidence in participation, and unsupported personnel and systems(53, 55). Another barrier was personnel barriers Many studies in nursing care found that obstacles were caused by team, personal and organizational issues, which were mutual understanding in the health team about patient-centered care, personal problems from lack of motivation due to hard work, less payment, and human resource management problems, such as team conflicts, lack of support for self-development, unsupported and appreciated(55, 56). Health professionals also have the attitude that they think they understand the concept and have put it into practice, but in fact, they need to be more fitting. It would say that one of the significant obstacles to applying the concept to the service provider caused by not understanding concepts and attitudes that have not changed, so preparing service providers is an essential part of bringing the idea of care that takes service users into effective action(56).

Recently, the new constitution of the Kingdom of Thailand B.E.2560 (2017 C.E.) stipulated that citizens should have an appropriate portion of family physicians(57). Two years later, the parliament of Thailand has been passed the primary health care act mentioned that family physicians should work with a group of allied health professionals with patient-

centered care in a primary care setting(58). This constitution shows that Thailand is firmly committed to primary health care reform to provide people with access to care, good quality services and cost containment.

The patient-centered or person-centered care in dentistry in Thailand has been recognized for many years, mostly in terms of comprehensive, holistic, or humanized dental care(59-65). Patient-centered care for dentists was developed gradually until the Ministry of Public Health established a family care team policy in 2014(66). The dentist is one of the health teams that must take care of people at the primary care level and must be competent to work with other healthcare professionals using family principles and a patient-centered focus(67). Thus, dentists must develop themselves to be ready to work with other multidisciplinary organizations in holistic and patient-centered care. At that time, a group of dentists in the Ministry of Public Health, in collaboration with the Thai Dental Council and the Royal College of Dentistry of Thailand, gathered to set up a framework for dental development following the direction of the development of the country's primary health care system. Thus, they did a feasibility study of establishing a new specialty in dentistry called a family dentist who practices as a primary care dental specialist with a patient-centered approach. In 2018, the Ministry of Public Health supported the development of dentists by training in short courses using the principles of family medicine and patient-centered care as the philosophy of the study(68).

The development direction of the Thai health system focuses on providing people with quality services from the primary level, in which patient-centered care is essential. Most problem indental care quality are related to the ability of dentist to communicate, deep listening, understanding family and related contexts such as social, cultural, environmental, and empathy for the patient. These abilities could be partially described as characteristics of patient-centered dental care. It is necessary to promote dentists with more patient-centered care concepts through additional training for dentists at all service levels, particular in primary health care, or perhaps by adapting the Doctor of Dental Surgery curricula in dental schools to produce highly qualified graduates with more intensive patient-centered care skills.

Although patient-centered dental care is essential, attributes or characteristics of the patient-centered dental care concept still need to be clarified. Dentists with a different understanding of patient-centered care concepts will serve differently. Therefore, concept synthesis to describe and explain patient-centered care in dentistry is needed. When defining the elements of the patient-centered care concept in dentistry, it is imperative to define quantitative measurements to implement the concept effectively, aiming to better oral health. Even if several instruments measure patient-centered care, there currently needs to be an instrument constructed mainly to measure the patient-centered care of dentists. This study aimed to synthesize the patient-centered care concept in dentistry and to develop a reliable patient-centered care scale for dentists in a primary care setting in Thailand. The two scales will be developed 1) the Dentist self-assessment scale and 2) the Patient perception scale-The

scale development process includes quantitative and qualitative methods with exploratory factor analysis and confirmatory factor analysis. The two measurement models would be test invariance across groups and test the personal attribute effect on the level of dentists' patient-centered care and patient perception of patient-centered care.

Research question

1. What is patient-centered dental care in primary health care in Thailand?
2. What is the appropriate instrument to measure patient-centered care of dentists in primary health care in Thailand?
3. Is the patient-centered care measurement model invariance?
4. Can personal attributes of dentists and patients affect the level of patient-centered care of dentists?

Research Objectives

1. To specify the definition and model of patient-centered dental care in primary health care in Thailand.
2. To develop patient-centered care scales for primary dental care

   2.1 The patient-centered care of dentist scale (PCCDS-D version).

   2.2 The patient perception of patient-centered care of dentist scale (PCCDS-P version).
3. To test the invariance of the measurement models across levels of community hospitals in primary care:

3.1 The patient-centered care of dentist scale (PCCDS-D version).

3.2 The patient perception of patient-centered care of dentist scale (PCCDS-P version).

4 To test the effect of personal attributes to the level of patient-centered care of dentist in primary care:

4.1 Personal attributes of dentist to level of patient-centered care.

4.2 Personal attributes of patient to level of patient perception of patient-centered care

Research Hypothesis

The hypothesis for research question 3 are.

1. The measurement model of dentist patient-centered care is variance between dentists in large and small community hospitals.
2. The measurement model of patient perception of patient-centered care of dentists is variance between patients in large and small community hospitals.

The hypothesis of research question 4 are.

1. Personal attributes of dentist which are gender, number of practice year, specialty, and number of cases per day, can affect the level of patient-centered care of a dentist.
2. Personal attributes of patients, which are gender, age, and type of health insurance, can affect the level of patient perception of patient-centered care of dentists.

Scope of Research

This study is developing the instrument to measure patient-centered care of primary care dentists with the research population of experts in relevant fields in Thailand. Data were collected from a multistage random sampling of primary care dentists in hospitals under the Ministry of Public Health throughout Thailand. Another sample is multistage random sampling patients or their parents/caregivers who used dental services in community hospitals under the Ministry of Public Health throughout Thailand between data collection periods.

Operational definition

Patient-centered care refers to "Providing care that is respectful of, and responsive to, individual patient preferences, needs and values, and ensuring that patient values guide all clinical decisions."(22)

Person-centered care refers to "a philosophy that sees patients as equal partners in planning, developing, and assessing care to ensure it is most appropriate for their needs. It involves patients and their families being at the heart of all decisions"(14)

Primary health care refers to a comprehensive approach to health involving the entire society. Its primary goal is to guarantee the utmost level of health and well-being for everyone, ensuring fair and equal access. It is achieved by prioritizing individuals' needs and intervening at the earliest stages across the entire range of health-related activities, including promoting good health, preventing diseases, providing treatment, facilitating recovery, offering palliative care, and delivering these services as close as possible to people's everyday surroundings. (69).

Primary dental care refers to the ongoing administration and organization of dental health services offered by a system of dental care providers, serving as the initial point of contact for maintaining good oral health, preventing diseases and injuries, and restoring oral health. It encompasses the proper evaluation of overall health and oral health conditions, delivering oral diagnostics, preventive measures, educational guidance, and treatments. Additionally, it involves referring and coordinating episodic specialized dental care when needed. (70).

Primary care dentist refers to a dentist who works and practices full-time in a community hospital under the Ministry of public health of Thailand.

Measurement invariance refers to a statistical characteristic of measurement that signifies the consistent assessment of the same underlying concept across specific groups, such as different genders or cultural backgrounds. It implies that the structure of a measurement tool remains equivalent across these samples, thereby accurately capturing the intended psychological trait within the same framework.(71, 72).

Multi-group analysis refers to an analysis of the structural equation model for multiple population groups or samples such as gender variables, educational levels, schools, organizations, etc., or population groups with different cultures(73).

Conceptual Framework

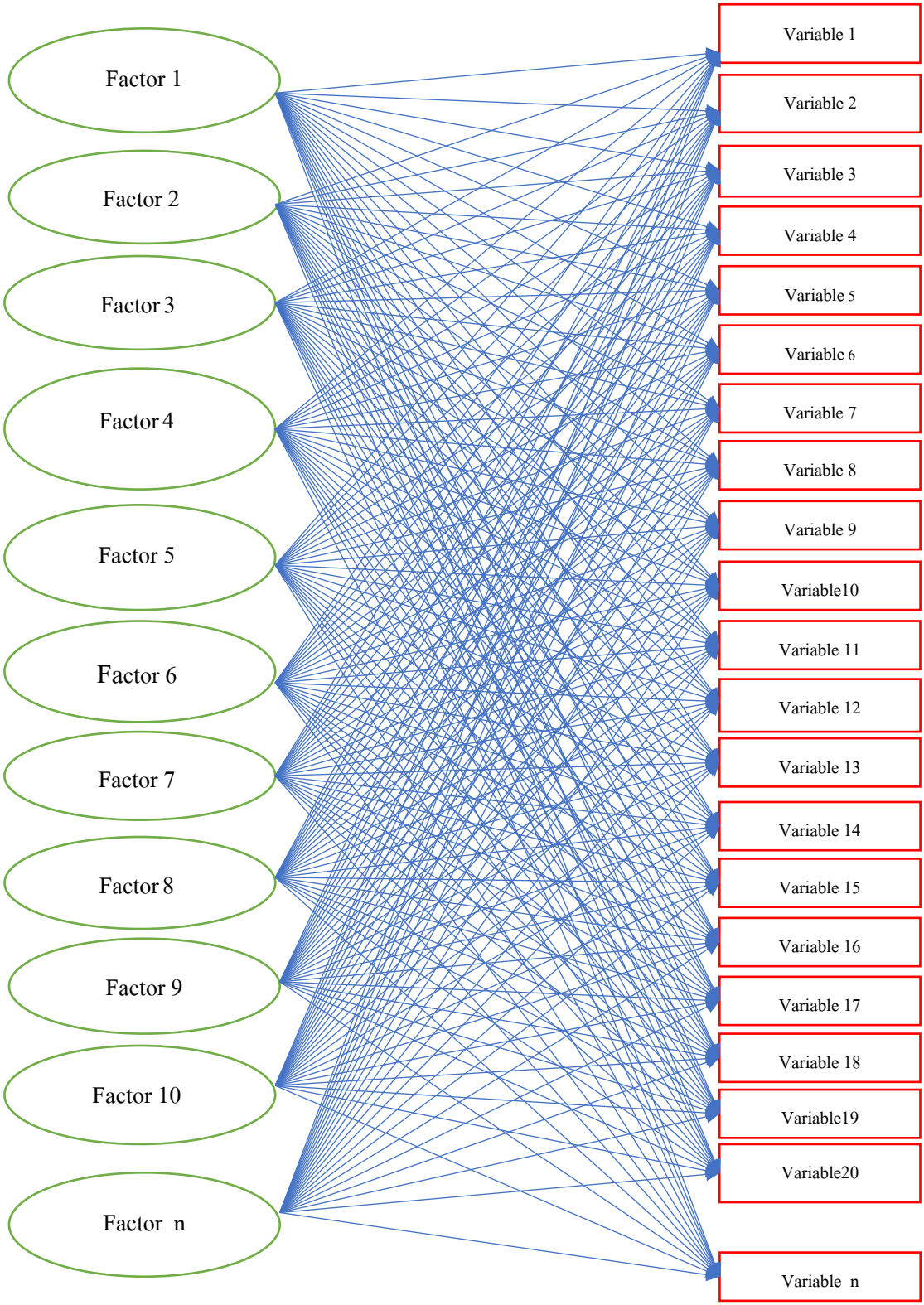

Figure 1 Phase 1 Conceptual Framework

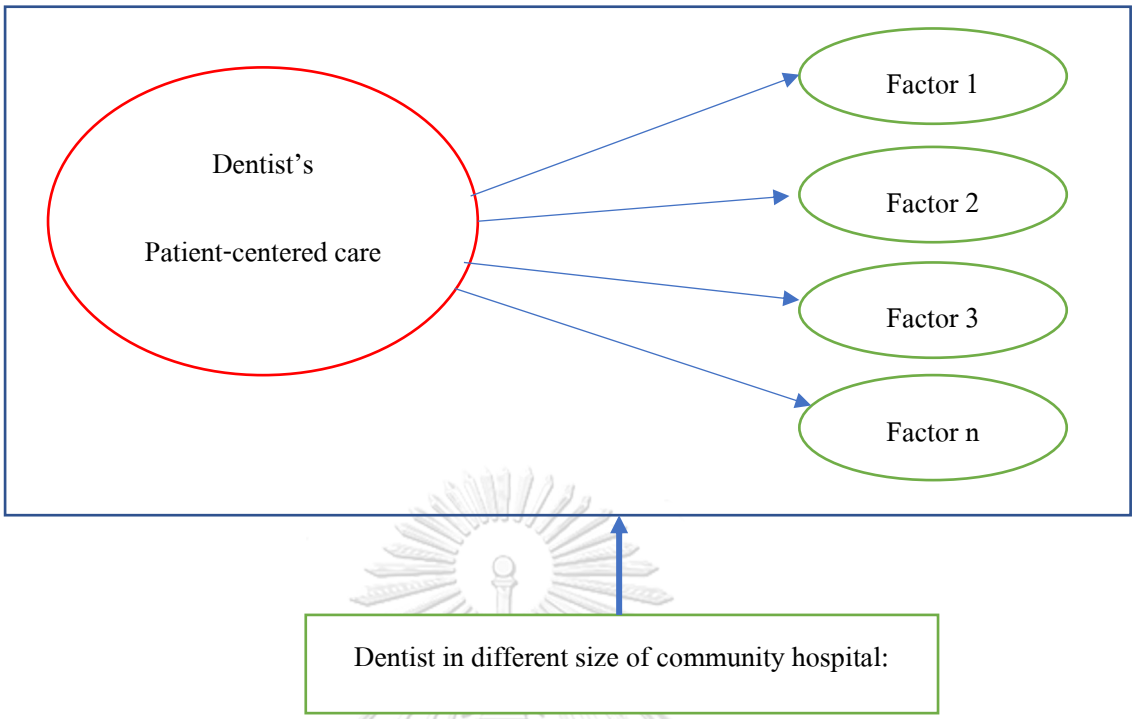

Figure 2 Phase 2.1 Conceptual framework of invariance test of dentist self –assessment measurement model

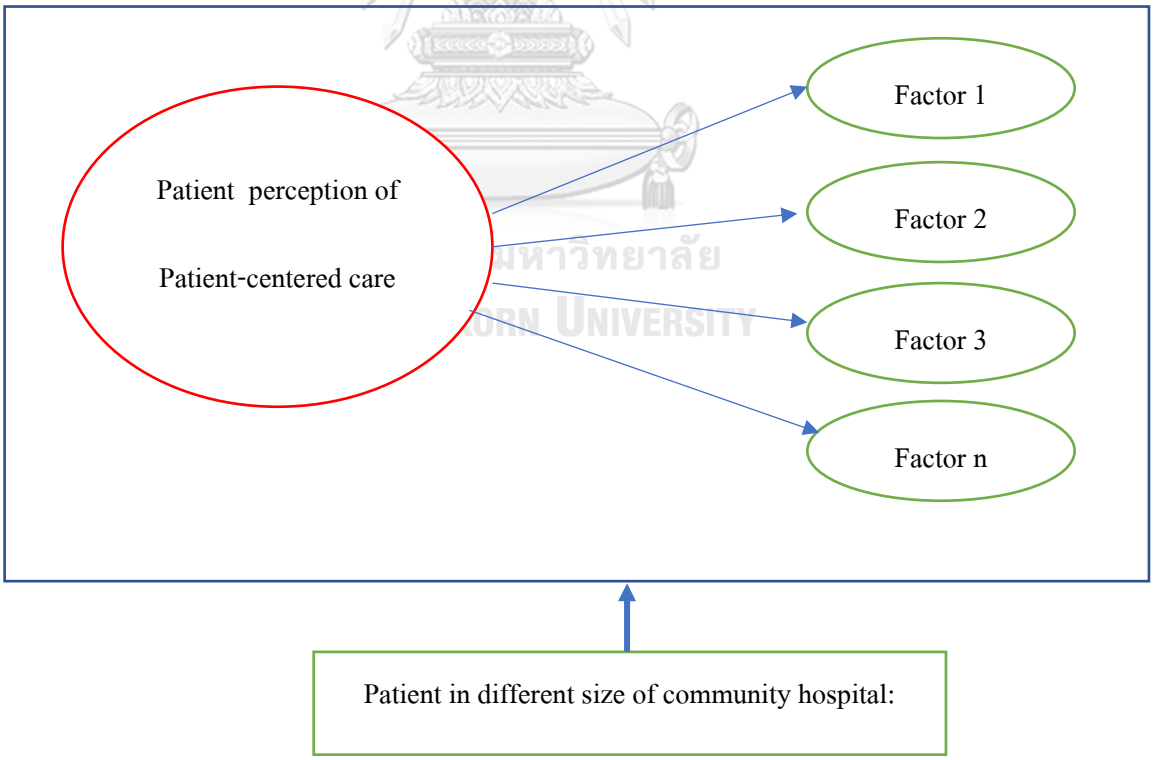

Figure 3 Phase 2.2 Conceptual framework of invariance test of patient perception measurement model

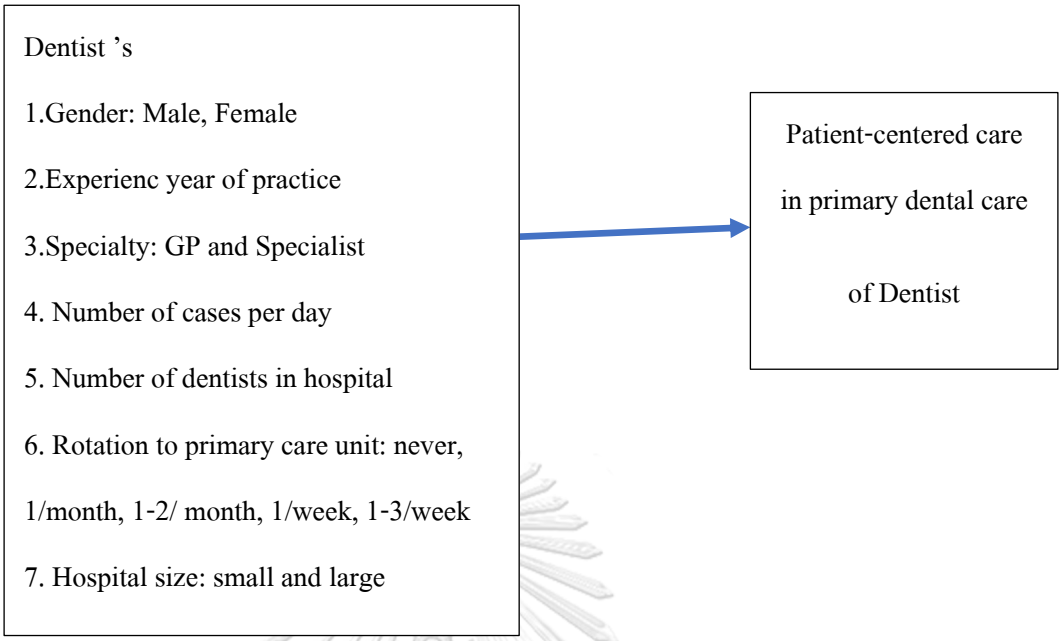

Figure 4 Phase 2.3 Conceptual framework: Test the effect of dentist personals attributes to patient-centered care

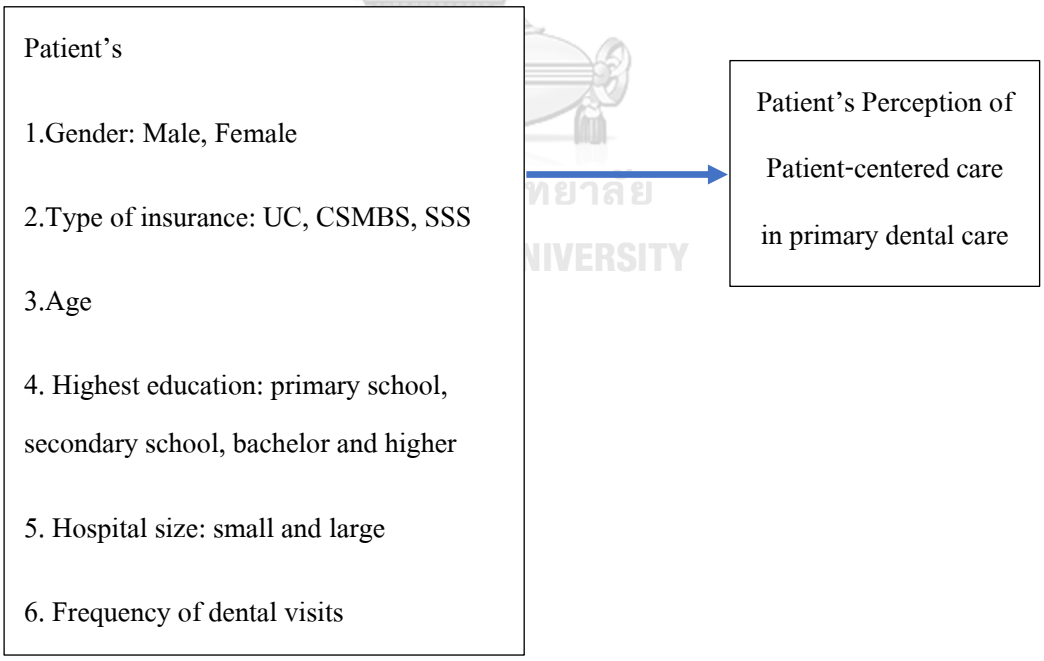

Figure 5 Phase 2.4 Conceptual framework: Test the effect of patient personals attributes to patient perception of patient-centered care.

Benefit from research

1. The scales can be used as a reliable tool to evaluate the patient-centered care approach of primary health care dentists.
2. The scales can be used as a reliable tool to evaluate the annual performance of dentists in primary health care.
3. The results of the scales can be used as a guideline to create initiatives to improve the patient-centered care competency of primary healthcare dentists.
4. The results of the scales can be used to evaluate the patient-centered care of the primary dental care system.

Key words

Patient-centered care, person-centered care, scale development, primary health care, EFA, CFA, measurement invariance, multi-group analysis

Research Design

This study is an instrument development qualitative and quantitative mixed-method research design.

Ethical Considerations

The study obtained the ethical approval of The Human Research Ethics Committee of the Faculty of Dentistry, Chulalongkorn University, Bangkok, Thailand (study code HREC-DCU 2021-113).

Chapter II

Review literature and related research

This chapter includes a review of the literature and related research for developing dentists' patient-centered care scales in Thailand's primary health as follows:

1 Patient-centered care

2 Measurement of patient-centered care

3 Primary dental health care in Thailand

4 Factor analysis

5 Multi-group analysis and measurement invariance

1. Patient-centered care

1.1. Concept and important of patient-centered in health care

Patient-centered or person-centered care began to exist in ancient times of medicine in ancient Greece, India, and China(74). Patient care should be specific to each person(75) and focus on the system and the patient rather than the disease(74, 75). Later, with the evolution of medicine, the advancement of medical technology has made medical services focus on specific treatments, specific diseases, specific organs, and more complex therapies, resulting in holistic and patient-centered care has diminished. Around the middle of the 20th century, it has begun to address patient-centered and holistic care again. In Paul

Tounier's vision, a famous general practitioner in Geneva, Switzerland, who wrote the book "Medicine of the Person" in the 1940s, was that true healing comes about primarily through the relationship between the patient and the doctor(76, 77) M. Balint and E Balint 1969 proposed that physician should do more than just a physical examination, diagnosis and treat of the abnormal organs or functions, which is called "illness-oriented" but should diagnose and examine the patient's history in whole person way to understand all the conditions and circumstance related to the patient, which is called "patient-centered"(13).

Important and benefits of patient-centered care

Over 50 years, patient-centered has been introduced to health care and gradually accepted as one of the essential components in health service delivery(13, 78-82). Patient-centered or person-centered care can be interpreted in several ways, for example, good communication, generosity, empathy, satisfaction, good adherence to medical advice, good doctor-patient relationships, shared decision-making in treatment, and trust. With the development of medical technology, people live longer. The rapidly changing social and economic conditions affect physical and mental health, people consuming improper food, rushing to live, less physical exercise, and stress. People who live longer are more likely to suffer from chronic illnesses or diseases that are more complicated to treat and, therefore, must use more medical services. Hence, the quality of health services is becoming more and more of a public concern. Providers or hospitals also need to pay attention to them, hoping that patients use them with peace of mind, willingness, and confidence.

More quality can increase hospital revenue.

In the United States, they assessed patient satisfaction regarding health services frequently using questionnaires. These questionnaires contain general inquiries that are administered to numerous patients, and their responses are compiled to aid in enhancing healthcare delivery and promoting health plans and products in the market. However, as early as the 1980s, it was recognized that such surveys relied on vague and questionable measures of "satisfaction," often yielding results of limited value for care improvement. As a result, patient experience surveys replaced these assessments in the United States, aiming to ensure and incentivize enhanced healthcare delivery. Many Medicaid programs serving the disadvantaged or disabled population employ these surveys to evaluate the quality of care provided by healthcare professionals and clinics, determining reimbursement accordingly. Additionally, certain U.S. hospitals may adjust their government payments based on their performance in patient experience surveys. (83).

Increase patient satisfaction.

Enhancing patient satisfaction can be achieved through patient-centered care. In the primary care setting, patient-centered care and the collaborative process of co-creating care have a positive correlation with patient satisfaction, and improved physical and social well-being among patients with multiple chronic conditions. (84). There is a strong connection between effective communication in medical care and improved patient adherence. (85) Training physicians to improve their communication skills has enhanced

patients' adherence. According to a study, there is a direct association between patient-centered care and the experience of health services. Additionally, patient satisfaction partially mediates patient-centered care and the overall healthcare experience. (86). The evidence indicates that shared-decision making can effectively improve patient's satisfaction, treatment adherence, and health status(87). The communication skills of their physicians significantly influence the satisfaction of patients. (88). Patient-centered communication skills are crucial for providing such care. These skills have a beneficial effect on patient satisfaction, adherence to treatment, and self-management. (16).

Improve health outcome.

By prioritizing patient-centered care and involving patients in co-creating their care, healthcare providers can enhance the outcomes for patients with multiple chronic conditions. This approach aims to tailor the care to the specific needs of each patient and has the potential to yield improved results. (84). Implementing patient-centered practice has been shown to enhance the health status of patients and improve the efficiency of care by reducing the need for excessive diagnostic tests and referrals. (89). According to a systematic review, robust evidence indicates that patient-centered significantly impact satisfaction and self-management.t(90). Gaining insight into patients' experiences of their care can contribute to a better understanding of what patients perceive as patient-centered and how care processes are connected to crucial patient outcomes. This understanding can facilitate improvements in healthcare delivery. (91). Effective and proficient

communication can enhance patient satisfaction, improve disease comprehension, foster medication compliance, and ultimately improve healthcare outcomes. (92). The study conducted in Hong Kong, focusing on patient engagement and its association with health-related quality of life in primary care, revealed that enhancing patient engagement can positively impact health-related quality of life. (93). Research findings propose that the complete implementation of a patient-centered care (PCC) approach reduced hospital stays and helps maintain functional performance in patients admitted for worsening chronic heart failure. Significantly, this does not increase the risk of readmission or compromise the patient's health-related quality of life. (94). Significant enhancements were observed in various aspects, including self-care, physical and mental well-being, healthcare costs, uncertainty surrounding illness and recovery, patient dignity, treatment, and healthcare systems. Furthermore, improvements were noted in symptom burden, self-efficacy, and overall quality of life. (95).

Reduce unnecessary health care expenses.

Patient-centered care is related to a decrease in the utilization of healthcare services and a reduction in total annual charges. The lower annual medical care charges can be considered a significant outcome of medical visits that prioritize patient-centered approaches. (96). Patient-centered communication has been found to correlate with decreased expenditures on diagnostic testing; however, it is also associated with longer visit lengths. The potential impact of costs and visit duration on physicians and healthcare

systems may influence their willingness to adopt and implement a patient-centered approach. (97).

Narrowing inequality.

Patient-centered care reduces racial, ethnic, and socioeconomic health disparities(98). Patient-centered care is often focused on such as the convenience of office hours, the ability to make appointments when needed, seeing on time, appointments, and near-home services so that patients can receive services whenever and wherever they need them.

Reduce healthcare lawsuits.

Doctors practicing proper communication would be more likely to reduce prosecution for malpractice(99). Poor communication between dentist and patient could lead to a dentist's ethical lawsuit. The study in Thailand found that almost 50 percent of the Dental Ethics Litigation of the Dental Council of Thailand 2002-2019 comes from dentist behavior due to poor communication, ignorance, impolite, and disrespectful patient dignity of (36). A study of all dental prosecutions recorded from 2009 to 2012 in the eastern province of Saudi Arabia concluded that mostoral surgery cases can be prevented by preoperative measures or by addressing the effects of surgical errors through good relations and patient communication(37).

Less burnout, less stress and better health provider outcome.

Specific evidence suggests that healthcare providers who employ patient-centered care skills demonstrate positive associations with various outcomes, including job satisfaction, burnout levels, stress of conscience, psychosocial work environment, job strain, and intent to leave their current positions. (100). A study conducted in Iran recommended preventive measures to reduce the risk of employee burnout. These measures include enhancing social skills, communication competencies (a crucial aspect of patient-centered care), and coping strategies. (101). The research discovered that nurses working in long-term care facilities demonstrated improved person-centered care abilities when they experienced a higher quality of life and reduced job stress. (102).

Policymakers must prioritize national policies that promote patient-centered care. These policies should facilitate healthcare professional's acquisition and retention of patient-centered care skills while encouraging organizations to foster a culture of patient-centeredness. Patient-centered care relies on three key elements: an informed and engaged patient and their family, healthcare professionals who are attentive and responsive to both the disease and the individual patient, and a well-coordinated and integrated healthcare environment that supports the collaborative efforts of patients, families, and clinicians. Policymakers' endorsement of patient-centered care should encompass all three essential components. (103).

Definition and model of patient-centered care concept

The definition of patient-centered care differs according to the development methodology of the concept, which may come from literature reviews, expert panels, interviews, and focus groups with relevant populations and professionals in different healthcare settings, service areas, and disciplinary such as child and parent patient, elderly, primary care setting, medicine, and nursing care. Primarily it was defined in medicine and nursing care(1, 89, 104, 105). At the same time, other health professions adopted this concept to apply in practice, such as pharmacy(3, 106), physical therapy(5, 6, 107), as well as dentistry(10-12, 31, 32, 108, 109). Patient-centered and person-centered can be interchangeably used because they have similar meanings, although there are some differences(14, 15, 78, 110). Some similarities include engagement, empathy, holistic, and shared decision-making. But there are differences in the care goals, with patient-centered care focused on functional goals and person-centered care focused on healthy and meaningful life(78).

The influential report titled "Crossing the quality chasm" by the Institute of Medicine in 2001(22) established patient-centered care as an essential aspect of high-quality healthcare. Patient-centered care, as defined in the report, involves providing care that respects and responds to the patient’s individual preferences, needs, and values. It also emphasizes ensuring that patient values guide all clinical decisions. This concept of

patient-centered care is one of the six aims of healthcare quality outlined in the report, alongside safety, effectiveness, timeliness, efficiency, and equitability.

While there are various definitions and models of patient-centered or person-centered care in healthcare, only some universally accepted definitions. In the researcher's review, they examined and provided examples of eight different models of patient-centered or person-centered care.

1. **Patient-centered medicine model in family medicine by Stewart Moira et al.**(111-114)

From experiences of working and researching, Stewart Moira and her team proposed,

the six interactive components of the patient-centered model are described below with the adaptation by The Royal College of Family Physicians of Thailand:

1.1 Exploring both the disease and the illness experience

In the effective search for disease and illness, the healthcare practitioner should assess the patient's thinking and perception of well-being, current health conditions, recurring illnesses or diseases, and past illness experiences. In addition, it is essential to find out, contribute to and understand the meaning, feelings, and emotions within the patient. It is like seeing the inner world with the patient's eyes by integrating it with history taking and physical examination to provide diagnosis and differential diagnosis

according to the problems found. The experience of illness (illness) can be done using the IFFE question, which is detailed as follows.

Idea (I) is the assessment of thinking and understanding about the disease in which it occurs. People should consider the origin and correctness of thinking and understanding about the disease and the appropriateness of associating such thoughts with the patient's subjects.

Feeling (F) assesses of how the patient feels about the underlying illness. It should also be considered the origin and appropriateness of feelings associated with the illness, for example, a patient who recently received bad news from a doctor but was happy because receiving compensation insurance, etc.

Function (F) assesses the impact on the patient's life in terms of daily life, work, family, and society arising from illness. This assessment helps doctors determine the severity of the pain and the urgency to aid the patient.

Expectation (E) assesses of a patient's expectation of a doctor's treatment and its progression. It should also be considered the origin and appropriateness of expectations that arise. For example, cancer patients expect treatment to cure themselves because they worry that their children will not have caretakers if they die.

1.2 Understanding the whole person

Understanding life and its context Patient-centered care is essential to patient-centered care because understanding life will help the caregiver to recognize and

understand the meaning of the patient, both the present experience and the meaning from the past to the present, as well as predict the future. For the process of understanding individual life, physicians should assess and understand patient baseline information, patient personality traits, past life history, daily lifestyle, current situation in the patient's life and spirituality, as well as social characteristics and environment and culture of the community in which the patient lives.

1.3 Finding common ground

When healthcare practitioner is aware of the detailed and accurate information about the disease and experience of illness of the patient. The next step of the patient care process is to identify and prioritize problems, establish treatment goals, and determine the role of the physician and patient in care. This process should occur through collaboration between physicians and patients, including allowing the patient to talk about their concerns in treatment. Stakeholders should discuss for an introduction to the benefits and disadvantages of each treatment method and common problems or concerns between the doctor and the patient. They would agree upon a concrete goal. The doctor plays a role in giving advice, suggesting appropriate treatment guidelines.

1.4 Incorporating prevention and health promotion

Prevention and health promotion are essential for physicians to care for patients at all stages of the disease. In addition to helping patients stay healthy, they also help reduce the loss or complications arising from disease and illness.

1.5 Enhancing the patient–doctor relationship

A good relationship between doctor and patient is the cornerstone of patient-centered care. It will lead to the creation of a relationship that is beneficial to maintain. It also supports the development of the patient's self-care potential. Building good relationships include caring and compassion, awareness of the potential for power dynamics, focus on healing, and self-awareness.

Mutuality is a patient-centered relationship model, which is a characteristic of the relationship between the doctor and the patient. Both physicians and patients have equal levels of control and roles in treatment. It arises because of participation in building relationships and sharing important roles in treatment. The doctor is a medical expert, while the patient has the expertise of their life.

1.6 Being realistic

Physicians need to spend time listening to their problems, understanding their lives and finding appropriate care together. Therefore, patient care need more patient care personnel in certain situations, such as having to look after large numbers of patients in a limited time. The doctor may only need to complete some of the five elements within a single care. To solve the problem, the doctor may appoint additional patients to the next appointment or select a patient with severe or complex problems with complete care first. On the other hand, other patients use their subsequent care

appointments or organize multidisciplinary teams such as nurses, psychologists, and social workers to provide comprehensive care.

2. **Patient-centredness care model by Meads and Bower**.

Meads and Bower reviewed literature about patient-centredness and its measurement, then they proposed the five dimensions of patient-centredness care as follows.

2.1 Biopsychosocial perspective

Many times, biomedical diagnosis alone cannot cover and understand a patient's illnesses, thoughts, feelings, and hidden expectations. Even though, medical treatment is often appropriate, it cannot relieve a patient's suffering or illness. On the other hand, some people who do not feel sick at all finally find a hidden illness.

2.2. The `patient-as-person'

More than just relying on a biopsychosocial perspective is required to understand the patient's illness experience comprehensively. Each person is different. The same illness, but each patient perceives and feels the illness differently, depending on the individual and the context surrounding the patient. Therefore, to fully understand the patient, plan the appropriate treatment for that disease or illness. The physician should consider each patient's unique personal and individual context.

2.3 Sharing power and responsibility.

Patient-centered care addresses the unequal power dynamics between doctors and patients, which typically favor the treating physician. Patients often feel compelled to follow their doctor's instructions, believing it will lead to a cure. However, there are instances where patients may disagree or feel uneasy about the care provided due to their perception of doctors' superior authority. Patients who express dissatisfaction or noncompliance with their treatment may result from their physician's shortcomings, such as failing to recognize the patient's expertise in their own illness or neglecting to provide sufficient information and explanations. Consequently, it becomes increasingly crucial to empower patients, allowing them to actively participate in their treatment decisions and take responsibility for the outcomes.

2.4 The therapeutic alliance

The relationship between the caregiver and the patient is significant. Although biomedical care takes this, but it is not considered necessary. Empathy-based relationships can lead to compliance and adherence to treatment. Patient care with an empathetic relationship can lead to compliance and adherence to treatment. On the other hand, negative emotional relationships with each other have a negative effect on treatment. For example, it may make mistakes in decision- making mistakes or fail to follow up on the treatment. Thus, developing a therapeutic alliance in patient-centered care is a fundamental requirement rather than a helpful addition.

2.5 The `doctor-as-person'

Patient-centered medicine, also known as "two-person medicine," recognizes that the doctor is an integral part of the patient's experience. The interaction between the doctor and patient is constant and intertwined, making it impossible to consider them separately. Emotions exchanged between the doctor and patient can have both positive and negative impacts, whether consciously or unconsciously. It is important to acknowledge that doctors are human beings who experience emotions and feelings. During the process of caring for a patient's disease or illness, there is often an exchange of thoughts and emotions through activities such as history taking, physical examination, and providing advice. Doctors should be mindful of their own thoughts and feelings, whether they are positive or negative, towards the patient.

3. The Eight Principles of Patient-Centered Care: The Picker Institute(24, 115-117)

Researchers from Harvard Medical School, on behalf of the Picker Institute and The Commonwealth Fund, identified seven primary dimensions of patient-centered care through a combination of focus groups, literature review, and input from various stakeholders, including discharged patients, family members, physicians, and hospital staff. Later, an eighth dimension - access to care - was added. These dimensions, referred to as Picker's Eight Principles of Patient-Centered Care, are based on practices that contribute to a positive patient experience. The dimensions include:

3.1. Respect for patients' values, preferences, and expressed needs.

3.2. Coordination and integration of care.

3.3. Information and education.

3.4. Physical comfort.

3.5. Emotional support and alleviation of fear and anxiety.

3.6. Involvement of family and friends.

3.7. Continuity and transition.

3.8. Access to care.

These principles address aspects such as involving patients in decision-making, coordinating care, providing information and education, ensuring physical comfort, offering emotional support, involving family and friends, ensuring continuity of care, and facilitating access to care. The aim is to create a patient-centered care approach that takes into account the diverse needs and preferences of patients.

4. Patient-centered medical home: (118)

The term "medical home" was introduced by the American Academy of Pediatrics (AAP) in 1967. Initially, it referred to a central source of medical information for patients. Over time, it has evolved to encompass a partnership approach with families, aiming to provide accessible, family-centered, coordinated, comprehensive, continuous, compassionate, and culturally effective primary healthcare. The concept of patient-centered care integrated additional elements such as primary health systems and chronic care models, eventually leading to the development of the "Patient-Centered Medical Home (PCMH)" model. This model has been endorsed by the American Academy of

Family Physicians, the American Academy of Pediatrics, the American College of Physicians, and the American Osteopathic Association. The PCMH model consists of seven core features:

4.1 Personal Physician: Each patient maintains an ongoing relationship with a personal physician who is trained to provide comprehensive and continuous care.

4.2 Physician Directed Medical Practice: The personal physician leads a team responsible for the ongoing care of patients at the practice level.

4.3 Whole Person Orientation: The personal physician is responsible for meeting all the patient's healthcare needs or appropriately coordinating care with other qualified professionals. This includes care throughout all stages of life, addressing acute and chronic conditions, providing preventive services, and offering end-of-life care.

4.4 Care Coordination and Integration.

4.5 Quality and Safety.

4.6 Enhanced Access.

4.7 Payment Reform.

These core features highlight the importance of a personal physician-patient relationship, physician-led care teams, comprehensive care for the whole person, care coordination, quality and safety measures, enhanced access to care, and payment reform. The PCMH model aims to provide a patient-centered approach to healthcare delivery.

5. Person-centered care: The Health Foundation: United Kingdom(14, 119)

Person-centered care, as defined by the health foundation, is a philosophy that recognizes patients as equal collaborators in the planning, development, and evaluation of their care, ensuring its suitability for their specific needs. This approach places patients and their families at the core of all decision-making processes. However, the concept is still in the early stages of adopting the concept of patient-centeredness, so it should be put into practice by incorporating elements of this concept rather than only by definition. Therefore, four components of patient-centered care are proposed:

5.1 Affording people dignity, compassion, and respect.

5.2. Offering coordinated care, support, or treatment.

5.3. Offering personalized care, support, or treatment.

5.4. Supporting people to recognize and develop their own strengths and abilities to enable them to live an independent and fulfilling life.

The individualized person-centered approach herein refers to the care of any patient, of any condition, of all illnesses with all elements together. Sometimes, even though it is not directly about focusing on enabling the patient. Healthcare workers can also provide patient-centered care through the other three elements.

The relationship in which health care professionals and patients work together to:

- understand what is important to the person.
- make decisions about their care and treatment.

- identify and achieve their goals.

6. Person centered medicine and people centered health care by Mezzich JE. Et al. (120, 121)

In 2016, Mezzich JE and his research team utilized various methodologies, including the involvement of international consultation groups, a thorough literature review, scale development, and statistical analyses. Through this sequential and iterative process, they identified the following key concepts of person-centered medicine and people-centered health care: 1) Ethical Commitment, 2) Cultural Sensitivity, 3) Holistic Scope, 4) Relational Focus, 5) Individualized Care, 6) Common Ground for Collaborative Diagnosis and Care, 7) People-centered Systems of Care, and 8) Person-centered Education and Research.

7. Person-centred nursing: (104, 122)

The development of the person-centered nursing framework involved a systematic process consisting of several steps. These steps included a thorough review of relevant literature on the underlying concepts, reconstruction of the framework, refinement of the concepts, and the creation of a visual representation of the framework. The face validity of the framework was then tested and further refined with the input of co-researchers and practitioners from various settings. The person-centered nursing framework consists of four key components. These include:

7.1 Prerequisites, which focus on the attributes and qualities of the nurse.

7.2 The care environment, which emphasizes the contextual factors that influence the delivery of care.

7.3 Person-centered processes, which involve a range of activities aimed at delivering care in a person-centered manner.

7.4 Expected outcomes, which represent the desired results of effective person-centered nursing.

8. The Gothenburg Model: Three key concepts (123-126)

8.1. Partnership - two experts meet.

The cornerstone of person-centered care lies in establishing a partnership between the patient and the healthcare professional. This partnership is built on mutual respect for each other's knowledge and expertise. On one hand, the patient and their relatives bring their expertise of living with the condition, while on the other hand, the healthcare professional contributes their expertise in care, treatment, and rehabilitation of the condition, based on a broader understanding.

As a result, healthcare providers need to view the patient as an active and responsible partner. However, this does not imply that the patient becomes a mere "customer" with complete control over the care they receive. Instead, the partnership involves shared responsibility, and care should be tailored to align with the goals, expertise, and resources of both parties.

The term "partnership" carries a legal connotation of agreeing to fulfill certain obligations, typically formalized in a contract. In the context of person-centered care, this agreement can be translated into a personal health plan—a collaborative document that ensures care is delivered as intended. While the health plan is not legally binding, it serves as a written record that documents and describes the agreed-upon approach to care.

8.2. Patient narrative: listening to the patient.

In person-centered care, it is essential to actively listen to the patient's narrative about their condition, in addition to considering the results of medical examinations and tests. This step serves as a prerequisite for providing personalized care. The treatment, rehabilitation, or care plan is developed collaboratively between the patient and healthcare professionals, and the agreed-upon approach is documented in a written health plan. This plan outlines the goals and strategies for short-term and long-term follow-up. Often, the patient's relatives also participate in this process, contributing to the shared decision-making.

The patient's narrative holds a central focus on their individual experience and interpretation of symptoms, as well as how these symptoms impact their daily life. It also considers the patient's available resources and possibilities in their unique circumstances. The act of sharing their narrative has the potential to promote healing and enhance the chances of finding relief from symptoms.

8.3. Documentation - a written health plan

The third element of person-centered care involves documenting the patient's narrative and health plan in their personal journal. This journal serves as a dynamic document that requires regular revisions and remains accessible to the patient at all times. It should accompany the patient throughout their healthcare journey. Essential information for providing safe care is communicated among healthcare professionals on a daily basis. Whenever possible, relevant information can also be shared with the patient based on their individual needs and preferences. Structured and systematic documentation is crucial to ensure quality and continuity in healthcare delivery.

In addition to these models, there are a lot of definitions and models of patient-centered care and several researchers have also published literature reviews which compared the different and common components of patient-centered care models such as:

Ma et al (127) reviewed found that there are 6 elements in common of patient-centered care: 1) Engaging the Patient as a Whole Person, 2) Recognizing and Responding to Emotions, 3) Fostering a Therapeutic Alliance, 4) Promoting an Exchange of Information, 5) Sharing Decision-Making and 6) Enabling Continuity of Care, Self-Management and Patient Navigation.

Hakansson Eklund J et al (78) undertook a study to consolidate existing literature on person-centered care and patient-centered care. The objective was to identify commonalities and distinctions between these two concepts. Through their analysis, nine

themes were identified that are found in both person-centered and patient-centered care. These themes include empathy, respect, engagement, relationship, communication, shared decision-making, holistic focus, individualized focus, and coordinated care.

The International Alliance of Patient Organizations (IAPO)(128): has put forth the Declaration on Patient-Centred Healthcare, emphasizing that patient-centred healthcare is essential for achieving a fair and cost-effective healthcare system. The current strain on health systems worldwide necessitates a shift from a disease-focused approach to one that prioritizes patients. The active involvement of individual patients in adhering to treatments, adopting behavioral changes, and self-management is crucial. Patient-centred healthcare holds great potential for improving health outcomes in a cost-effective manner. While patients, families, and carers have diverse priorities based on their respective countries and disease areas, there are common priorities that emerge. In order to realize patient-centred healthcare, we advocate for the following Five Principles as the foundation of healthcare:

1. Respect

Patients and caregivers possess an inherent entitlement to receive healthcare that is centered around their individual needs, preferences, and values. This includes respecting their autonomy and independence.

2. Choice and empowerment

Patients hold both the right and the responsibility to engage, according to their abilities and preferences, as active partners in healthcare decisions that impact their well-being. This necessitates a healthcare system that is attentive and offers appropriate choices in treatment and management aligned with the patients' needs. It also requires the provision of encouragement and support to patients and caregivers in directing and overseeing care to attain the highest achievable quality of life. Empowering patients' organizations is crucial in enabling them to assume significant leadership roles in assisting patients and their families in exercising their right to make informed choices regarding healthcare.

3. Patient involvement in health policy

Patients and patient organizations should be given the opportunity to actively participate in healthcare policymaking, at every level and stage of decision-making, in a meaningful and supported manner. This inclusive approach ensures that policies are designed with the patient as the focal point. It is important to extend this involvement beyond healthcare policy to encompass other areas such as social policy, recognizing that these policies also have a direct impact on patients' lives.

4. Access and support

All patients should have equitable access to healthcare services that are necessary for their specific condition. This encompasses access to services, treatments, preventive care, and health promotion activities that are safe, of high quality, and suitable

for their needs. It is crucial to ensure that necessary services are accessible to all patients, regardless of their condition or socio-economic status. In order to enhance patients' quality of life, healthcare should address their emotional needs and take into account non-health factors like education, employment, and family issues, as these factors influence their healthcare decisions and management approach.

5. Information

To make well-informed decisions regarding healthcare treatment and managing their condition, patients and carers require accurate, relevant, and thorough information. It is crucial that this information is presented in a suitable format, taking into consideration health literacy principles and factors such as the individual's condition, language, age, understanding, abilities, and culture.

1.2. Concept and model of patient-centered care in dentistry

Dental care is like that of medical and others health cares, which requires interaction between provider and patient during clinical encounter such as examinations, taking a history of illness, and the most unique and important, dental care is procedure intensive. Most dental clinical encounters, at least, may end with either oral examination or dental surgery. Dental health care and dental education adopted patient-centered or person-centered concepts gradually and accepted it is important(11, 12, 23, 32-34, 109, 129). The standard of practice or code of ethic or code of conduct of dental professional

council/board in many countries around the world written about patient-centered concept. A review of the researcher's literature found that many scholars have studied and proposed definitions and models of patient-centered or person-centered care in dentistry. But they are still not universal accepted. The researcher found 8 models of patient-centered or person-centered care in dentistry which details as follow.

1.2.1. Patient-centered dentistry by Kulich K. et al. (34)

Külich K. et al.'s research was a qualitative study to find the key elements in patient-centered care in dental phobia patients by interviewing 5 dentists and 15 patients in clinic specialized for dental anxiety people in Sweden. The interviews were taped and videotaped to stimulate the participants' participation. Research authors believed that video recording would have a significant impact on the data generation. The content was analyzed and developed a form of patient-centered counseling. These three key principles encompass the essence of patient-centered care: having a holistic perception and understanding of the patient, maintaining a positive outlook on people as a dentist, and fostering positive patient contact. The primary category, holistic perception and understanding of the patient, comprises two additional categories that encompass various aspects of patient-centered care, including patient-centered counseling. These categories are further supported by six subcategories: empathy, equality, dignity, emotional understanding, respect, and participation. This was a diagram of patient-centered framework:

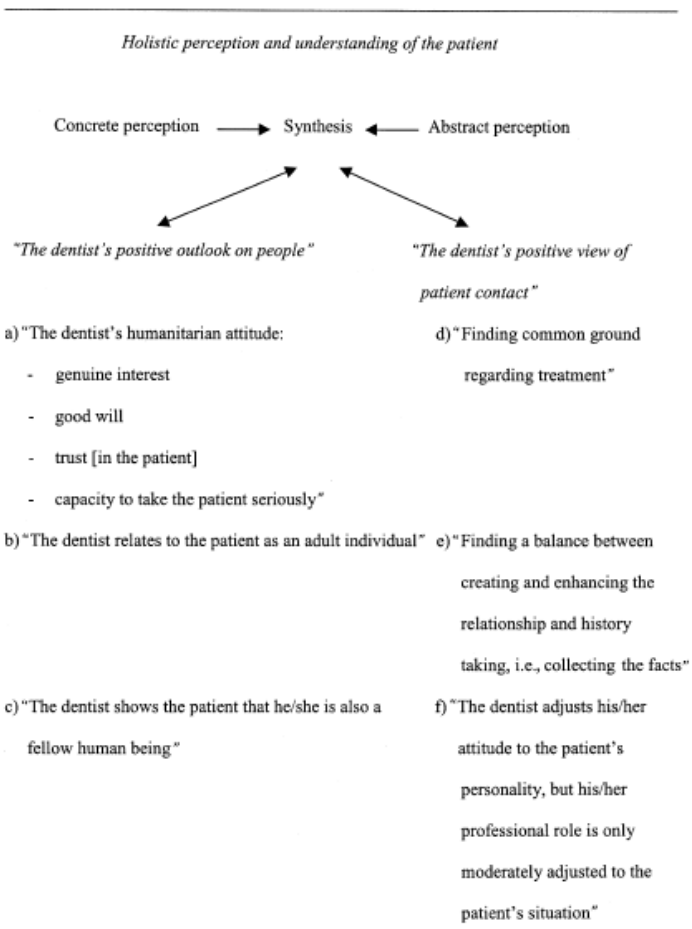

Figure 6 Holistic perception and patient understanding diagram of Kulich et al

1.2.1.1. Holistic perception and understanding of the patient.

CONCRETE PERCEPTION

The dentist aims to comprehend the patient's narrative and the reasons behind seeking dental care. It is crucial to allocate time for actively listening to the patient and understanding their desires. The dentist inquiries about the patient's occupation, as well as their family and psychosocial circumstances.

ABSTRACT PERCEPTION

During the consultation, the dentist relies on intuition. There is an awareness of perceiving beyond the conventional five senses, acknowledging the presence of a sixth sense. It involves reading between the lines and interpreting implicit cues.

SYNTHESIS

The value lies not solely in the patient's verbal expression, but in the amalgamation of all sensory inputs. Every perceivable sensation is registered and considered. The dentist's perceptions can range from subjective feelings to objective observations. The dentist interprets and integrates every clue to gather a comprehensive patient history.The dentist's positive outlook on people

a) The dentist’s humanitarian attitude

b) The dentist relates to the patient as an adult individual

c) The dentist shows the patient that he/she is also a fellow human being

1.2.1.2. The dentist's positive view on patient contact.

d)Finding common ground regarding treatment

The dentist provides guidance and presents the available options at the clinic, but ultimately, it is the patient who holds the authority to make the final decision regarding their treatment.

e) Striking a balance between fostering and strengthening the dentist-patient relationship and conducting thorough history taking, which involves gathering factual

information, is crucial. Both the interpersonal connection and the factual aspects hold equal significance in the dentist-patient dynamic.

f) The dentist adapts their demeanor to match the patient's personality, although their professional role is moderately adjusted to suit the patient's specific circumstances.

1.2.2. A five-faceted socio-humanistic approach by C. Loignon (129)

The aim of this study was to identify specific strategies and skills employed by dentists to better cater to the needs of individuals living in poverty. Qualitative research was conducted, involving in-depth interviews with eight dentists practicing in the unique community of Montreal, Canada. The analysis encompassed questioning, interviews, coding, scripting, and data interpretation. The findings reveal that these dentists have developed a pertinent socio-humanistic approach over the course of their practice, comprising five key elements: (1) comprehending the social context of patients; (2) allocating time and displaying empathy; (3) avoiding judgmental attitudes; (4) bridging social gaps; and (5) prioritizing direct engagement with patients.

1.2.2.1. Understanding patient's social context

The participants acquired knowledge about poverty and demonstrated an active interest in understanding the socio-cultural context of their patients. They highlighted that social factor, such as domestic violence, impact the oral health and dental attendance of individuals living in poverty, influencing their ability to take care of their teeth and access preventive care. In a multi-ethnic community, some

patients did not have a cultural tradition of visiting a dentist. It was crucial to consider the needs and expectations of people living in poverty without passing judgment. For instance, one dentist who provided regular emergency care acknowledged the likelihood of certain patient circumstances and aimed to create a non-stigmatizing environment.

1.2.2.2. Taking time and showing empathy

The dentist should demonstrate empathy towards the patient's living conditions by dedicating time to engage in conversations, displaying genuine concern, and refraining from judging their limited knowledge about oral health. Expressing empathy during clinical interactions may require additional time. However, instead of viewing it as a burden, dentists recognize the positive impact it has on building a therapeutic partnership, which is crucial for achieving successful outcomes.

1.2.2.3. Avoiding moralistic attitudes

Recognizing the challenges faced by individuals living in poverty in following a treatment plan and maintaining good oral hygiene, dentists employ strategies to maintain a firm approach without adopting moralistic attitudes. Blaming the patient proves ineffective as it hinders the collaborative treatment partnership, acknowledging that patients facing socioeconomic hardships may struggle with

adhering to good oral hygiene practices. Instead, dentists strive to motivate patients and engage in a negotiation process to determine the most suitable treatment options. They acknowledge the compromises that may be necessary to find common ground and achieve optimal outcomes.

1.2.2.4. Overcoming social distances

The participants acknowledge the social divide between themselves and patients living in poverty. They recognize their privileged status, including their formal education, respected position, and higher income. However, they emphasize their shared humanity and avoid denying the differences when interacting with patients. Their empathetic approach is influenced by their awareness of the advantages they possess and the corresponding responsibility to bridge the social distance. One of their strategies is to create a welcoming and direct connection with patients. They understand the significance of non-verbal cues, such as a confident tone and attentive gaze, in making patients feel comfortable during their interactions.

1.2.2.5. Favoring direct contact with patients

The dentist should prioritize the establishment of close and nurturing relationships with individuals. The key focus is on fostering a strong treatment partnership. Rather than placing blame on patients for their inadequate hygiene or lack of adherence, the dentist should invest effort in connecting with them and cultivating trust and respect. They directly engage with patients throughout various stages of

care, including managing hospitality, scheduling appointments, organizing bookings, overseeing paid dental procedures, and performing tasks typically handled by secretaries, dental assistants, and professionals. By personally answering phone calls and managing appointments, they enhance mutual understanding and communication.

1.2.3. Patient-centred care model in dentistry by Scambler S. et al.(23, 109, 130)

The objective of the study is to investigate the characteristics of patient-centered care, the methods used to teach patient-centered care, and its practical application. Qualitative research was conducted by interviewing 20 dental professionals who work in clinical and teaching roles within dental schools. The research team found as follow:

1. Defining patient-centered care by asked the question: What is patient-centered care from a practicing dentist's perspective?

The definition of patient-centered care covers six areas 1). Individualized care 2) Care in the best interests of the patient 3) Humanity 4). Holistic care 5) Patient involvement 6). Political construction

Individualized care should be centered around the unique needs of each patient, considering their socio-cultural context. It should prioritize patient attention, provide service with courtesy, and involve patients in the decision-making process regarding their treatment. It is important to recognize that the concept of patient-centered care can be influenced by political factors.

2. Patient-centered care in practice by asked the question: How does patient-centered care get practiced in dental surgery?

Most of the patient-centered care in dentistry happen in communication and rapport with the patient and their families. The dentist must share information and empower the patient to involve in all decision-making of treatment choices.

3. Learning to be patient-centered by asked the question: How do dentists get taught to practice in patient-centred ways?

In dental schools, dentists can acquire the skills to practice patient-centered care through regular teaching sessions that emphasize the provision of information to support decision-making. Drawing from the existing concept of patient-centered care in various disciplines, including medicine and nursing, the authors of this study propose a model aimed at enhancing the practical implementation of this concept. This model, called the practical patient-centered hierarchy, offers a clear framework of procedures that dental professionals can follow in order to deliver patient-centered care effectively. The patient-centered care model in dentistry is comprised of four foundational components, each with four levels of information, providing a structured approach to applying patient-centered care in clinical practice.

1.2.3.1. Exploring illness/disease and the context in which it occurs

The dentist must take a closer look at the state of the problem of the patients who are in the service. What is the problem? How does the patient experience their illness? Is it really a problem because of oral conditions, or is it a result of environmental, systemic conditions, or is it the sum of all contexts to the patient's problem? Thus, dentist must identify before moving to the further step of dental care.

1.2.3.2. The patient as a whole person

The dental practitioner must recognize patient in holistic way. Concerning patient's psychosocial condition, try to understand family, friend, social, culture, ethnic, religion, shadow behind themselves.

The first two basic elements are about placing illness and physical traits in an individual's situation while considering the illness from that person's perspective. The last two fundamental elements of patient-centered care model focus on the relationship between the dental team and the patient. These two elements relate to the type of relationship required if patients need to enable informed choices about their health and healthcare.

1.2.3.3. The ethos of the healthcare professional-patient relationship

This aspect focuses on demonstrating empathy and compassion and fostering a lasting connection with patients. It entails the importance of treating patients with dignity, kindness, compassion, courtesy, respect, understanding, and honesty. While

these principles contribute to providing high-quality patient care, they also form the essential foundational elements of patient-centered care.

1.2.3.4. The process of doctor-patient relationship: reaching common ground/sharing responsibility.

This ultimate core element encompasses the collaborative processes undertaken by dental care professionals and patients. It emphasizes the importance of "mutual understanding and mutual agreement" in three key areas: problem identification, setting treatment priorities, and determining the roles and responsibilities of both parties. The objective is to establish a shared comprehension of the health issue at hand and, in cases of conflicts or discrepancies, strive towards consensus. For instance, if a patient requests a specific non-clinical treatment that aligns with their perspective, it will be openly discussed to achieve mutual understanding and consensus, ensuring that the patient receives the necessary support for making

informed decisions.

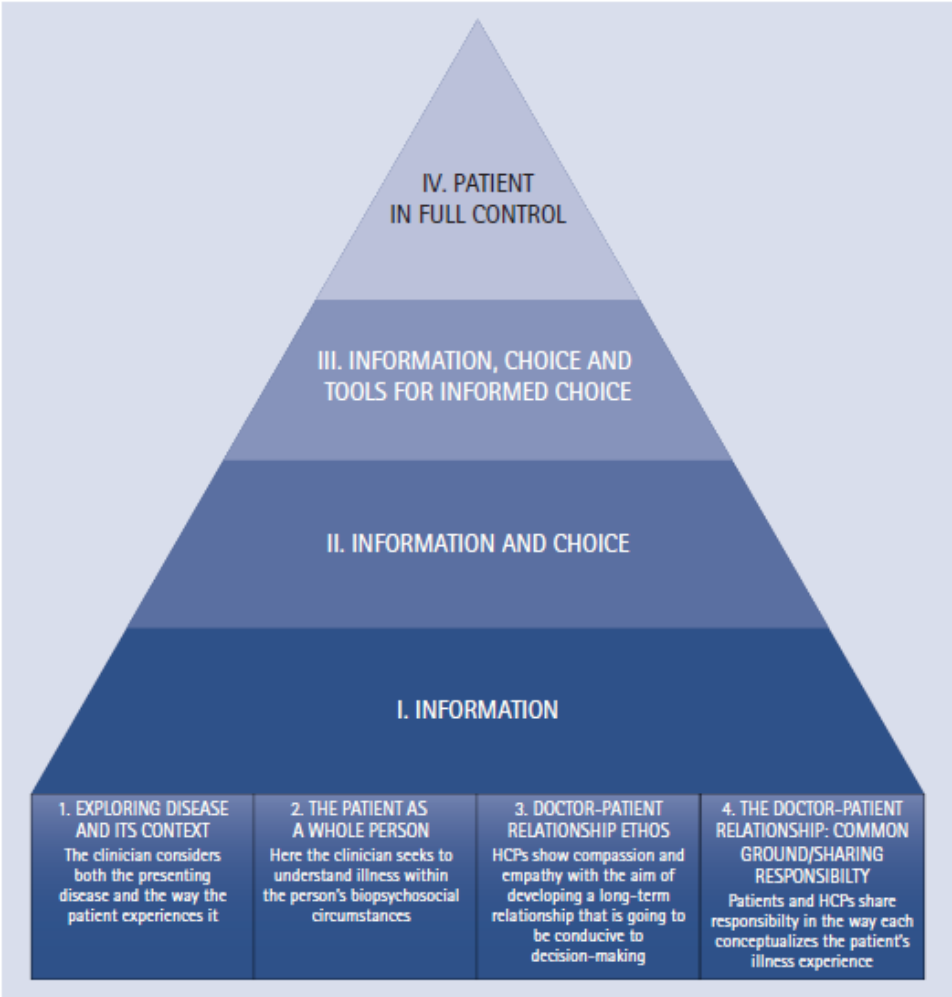

Figure 7 Scamber's model of person-centered care model in dentistry

However, the dentist cannot be only practice with 4 fundamental components as proposed, because in some situations the treatment options that are suitable for the patient chosen by the dentist may not meet the needs of the patient. The certain tools or guidelines are required to be considered to lead to common ground between dentists and patients based on patient-centered care. Thus, the authors also proposed additional

concepted tool as a hierarchy of information and choice. There are 4 levels of hierarchy as follows:

Level one: Basic information provision. In this level, during a consultation, the dental care professional imparts relevant health information to the patient in a primarily didactic manner. This level is commonly observed in routine consultations, regardless of whether they are patient-centered or not.

Level two: Information with the inclusion of choice. At this level, along with the information provided in level one, patients are introduced to the concept that there may be multiple treatment options available. In cases where treatment alternatives are not feasible, the idea of choosing between treatment and non-treatment is explored.

Level three: Information, choice, and tools for informed decision-making. Level three focuses on equipping patients with the necessary support to make fully informed choices. This entails considering all treatment alternatives from both clinical and psychosocial perspectives and providing guidance to patients in making informed decisions.

Level four: Patient autonomy and control. At this highest level, patients are empowered with information, choice, and the tools to make informed decisions, ultimately taking full control over their own care. The goal is for patients to make treatment decisions that align with their psychosocial and contextual circumstances, even if they deviate from the most "appropriate" clinical option.

The authors' conclusion emphasizes the explicit consideration of information, options, and management approaches within the context and limitations of the consultation when aiming for a patient-centered focus. The presented model offers a hierarchical framework that builds upon existing work, facilitating the transformation of good practice into patient-centered practice.

1.2.4. Person-centred model in dentistry by Apelian N. et al (33, 131)

The research team developed a patient-centered dental care model by the author practicing other health professional existing models one by one in his dental office and then allowing co-authors to observe behavior. The data was collected then discussed and modified the approach itinerary until finally concluded and presented as a model. In addition, practice with the model must keeping 3 principles along with: humility, hospitality, and mindfulness and in 4 processes: connecting, examining, sharing, deciding, and intervening.The person-centered clinical model consisted of 3 main

components as follow:

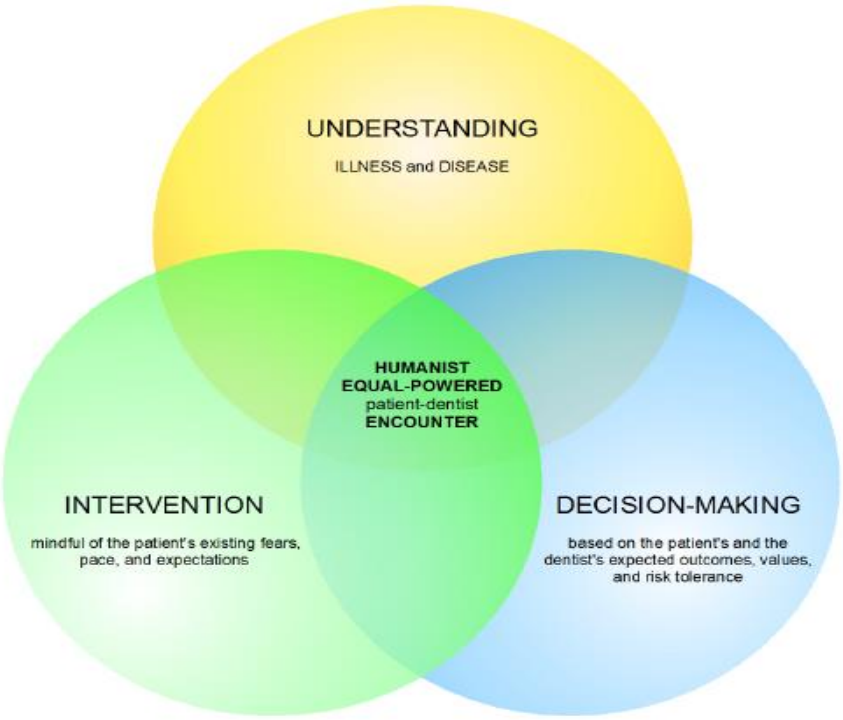

Figure 8 Person-centred model in dentistry by Apelian N.

1.2.4.1. Understanding

In order to provide effective care, it is crucial for the dentist to not only investigate the physical manifestations of the disease but also comprehend the patient's personal experience of the illness. Additionally, delving into the patient's life and considering it as a broader context for the disease helps in understanding the patient as a whole individual, and this information contributes to the overall assessment. Recognizing and affirming these concerns assists the practitioner in refining the intervention process.

1.2.4.2. Decision-making

The underlying principle of decision-making is based on the belief in an equitable relationship, where both parties hold equal power. This results in the development of a treatment plan that is always open to discussion, evaluation, and validation. The objective of the treatment plan is to meet the patient's current and future needs and expectations. In situations where finding an appropriate dental treatment becomes challenging due to uncertainty about the preferred option, decision support tools and consideration of patient preferences may be necessary. Through the influence of this balanced relationship, the dentist acknowledges the patient's autonomy and respects their individual values. This human-centered approach to decision-making, in turn, strengthens the core foundation of trust by giving the patient a prominent and meaningful voice.

1.2.4.3. Intervention

Intervention in this context encompasses both dental procedures performed by the dentist and the self-care practices recommended to the patient, as well as the possibility of referring the patient to a specialist, emphasizing the patient's autonomy. Dentistry has long been associated with anxiety and pain in the public's perception. By surveying individuals and understanding their fears, anxieties, and expectations, dentists become more attuned to the patient's needs, thereby reducing anxiety and, over time, minimizing negative perceptions of unpleasant experiences. A person-centered dentist recognizes the boundaries of their

expertise and acknowledges the impact of the patient's overall needs. Furthermore, conducting a comprehensive assessment of the patient's health can sometimes reveal underlying health issues beyond dental concerns. Through a well-established professional network, the dentist is able to address the holistic needs of their patients by making appropriate referrals to specialists.

There are three fundamental principles that guide every aspect of dental practice. The first principle is humility, which serves as the foundation for providing patient-centered care. It recognizes the importance of treating everyone with equality, starting with the dentist themselves. The second principle is hospitality, which entails the skill of engaging patients in meaningful conversations. It involves welcoming them without judgment, criticism, or preconceived notions, and genuinely listening to what they have to say. The third principle is mindfulness, which involves paying deliberate attention in a specific way: being fully present in the current moment and adopting a nonjudgmental attitude. A mindful practitioner remains fully engaged during conversations, examinations, and interventions, leading to enhanced effectiveness in all aspects of patient care.

1.2.5. Person-centred care in dentistry -the patient’s perspective by Mills I. et al (11)

In the southwest region of England, characterized by areas of deprivation in both urban and rural communities, a qualitative research study was conducted to examine the understanding of patient-centered care. The oral health in

this region is comparatively poorer than in other parts of England. The study involved in-depth qualitative interviews with 16 participants, including adults and carers or parents. A thematic approach, widely recognized for identifying, analyzing, and reporting patterns within data, was used to analyze the collected data. Participants expressed confidence in evaluating the quality of dental care based on their personal experiences, although they acknowledged that this perspective provided limited insight into the technical aspects of dentistry. The study identified five key components of patient-centered care: connection, attitude, communication, empowerment, and feeling valued.

Connection: Patients will prioritize the familiarity, continuity, engagement, rapport, and the relationship that builds trust in dentists rather than on their technical dental abilities.

Attitude: Patients have high expectations of receiving professional and respectful treatment that upholds their dignity, without any form of judgment. They highly value a caring, understanding, and empathetic approach from their healthcare providers. They appreciate a relaxed and calm demeanor, as well as a gentle and considerate approach to their treatment.

Communication: Effective and meaningful communication plays a crucial role in the dentist-patient relationship. Relationship breakdowns and trust issues often stem from poor communication skills. Issues such as using excessive

technical jargon, providing insufficient information, or showing inattentiveness can hinder effective communication. Patients typically desire a sufficient level of information that enables them to make informed decisions about their own healthcare. This is particularly important in preventive care, where inadequate information, limited time, or insufficient priority can be barriers. It is also important for professionals to communicate effectively among themselves to ensure coordinated and comprehensive care for patients.

Empowerment: Empowerment encompasses several key aspects, such as offering choices, maintaining control, providing information, and involving patients in decision-making processes regarding their care. Patients value the opportunity to engage in discussions about treatment options and to have a say in decisions about their healthcare. However, the degree of involvement desired may vary among individuals.

Feeling valued: The perception of being valued and appreciated holds significant importance for the majority of patients during their visits to the dentist. This includes aspects such as the allocation of sufficient time, being treated with respect, and, above all, being recognized as a unique individual. Time constraints were frequently mentioned, with appointments being described as hurried and examinations not sufficiently comprehensive. The prevailing sentiment among patients was the desire to feel valued, respected, and acknowledged as individuals.

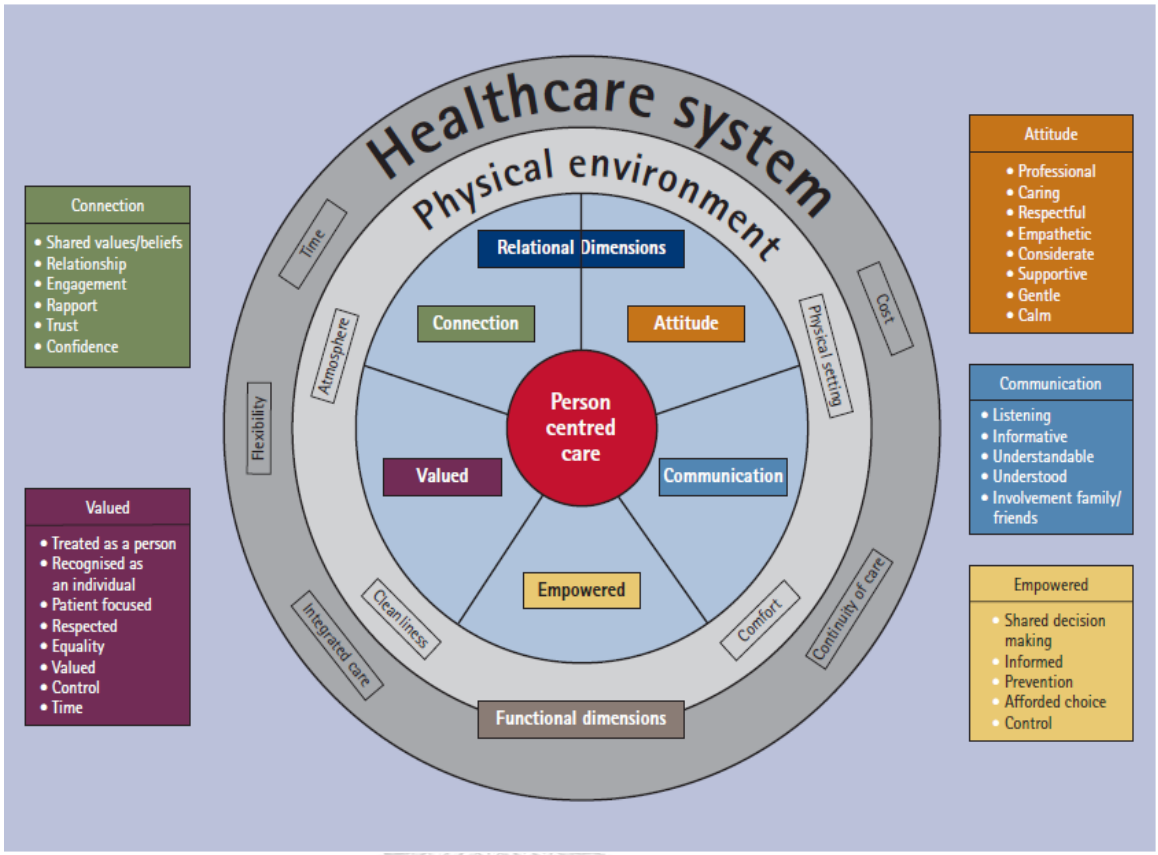

Figure 9 Person-centred care model in dentistry -the patient's perspective by Mills I. et al

1.2.6. Person-centred dental care by Noushi N. et al (32)

The aim of this study was to gain insights into the perspectives and aspirations of individuals facing economic challenges in relation to dental care, and to contribute to the advancement of person-centered dentistry. The authors conducted a qualitative descriptive study, involving a sample of 13 individuals living in poverty. The participants were selected using a purposive sampling strategy, specifically targeting independent clinical users in Montreal, Canada. Semi-structured interviews were conducted, with verbatim transcripts being recorded and subsequently analyzed based on thematic

analysis. The key finding of the study was that the participants expressed a desire for a humane and respectful approach from their dentists. The authors proposed a model of patient-centered care consisting of four distinct components, as outlined in the study.

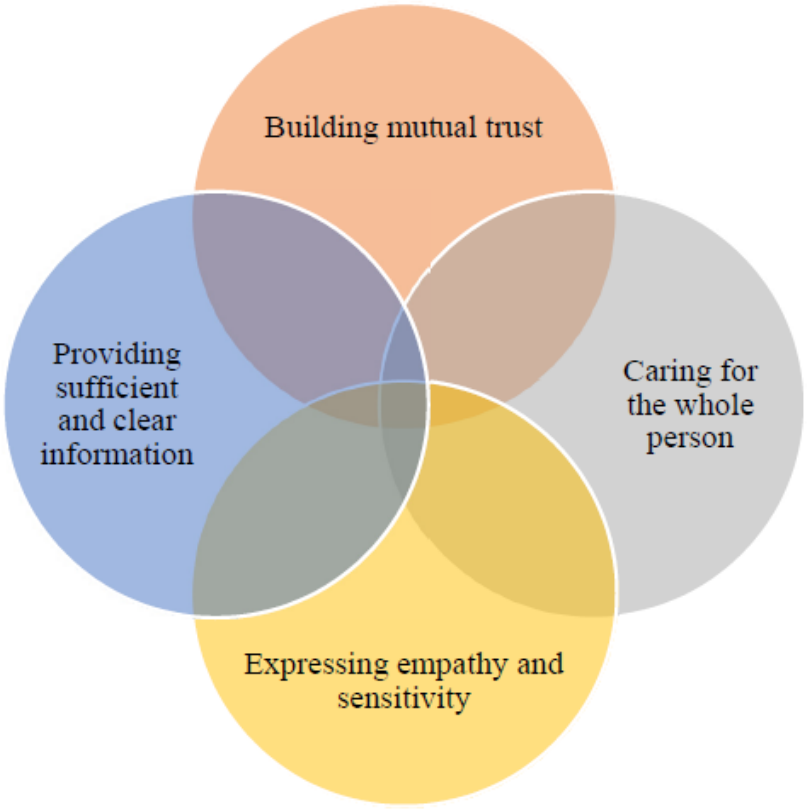

Figure 10 Person-centred dental care model by Noushi N. et al

1.2.6.1.Building mutual trust:

The mutual trust between the dentist and the patient should be established by showing empathy in the different contexts of each patient, leading to respect and dignity and to trust each other. By tailoring their care to the unique needs of each individual, dentists establish a foundation of trust in their clinical interactions. One way this is achieved is through delivering

services with kindness and goodwill, rather than being driven solely by financial considerations. This approach fosters a sense of trust and rapport between the patient and the dentist, strengthening the relationship between them.

1.2.6.2. Caring for the whole person

Patients desired a clinical environment that respected their overall well-being and treated them holistically, rather than solely focusing on their dental issues. Excessive scheduling of dental appointments often resulted in rushed and impersonal service, indicating a lack of trust in the patient and a decline in service quality. The absence of important qualities like friendliness and respect in dentists could lead to unproductive and potentially detrimental clinical visits.

1.2.6.3. Expressing empathy and sensitivity

Dental professionals should dedicate quality time to actively listen to the needs of individuals during their interactions. These interactions should be driven by the dentist's genuine care and consideration for the unique needs of each patient. Providing quality care entails incorporating the dentist's personal qualities, including attentiveness and sensitivity to the specific needs of the patients.

1.2.6.4. Providing sufficient and clear information

Ensuring a supportive environment where patients receive information from their clinicians is crucial. This means that dentists should prioritize creating a non-rushed atmosphere and encourage patients to ask questions within a respectful context. By allowing sufficient time for interaction, patients can feel more at ease and establish a clear line of communication with their dentists.

1.2.7. Patient-centered dental home (25, 26, 29)

The concept of the dental home originated in the early 2000s in the USA, aiming to establish early connections between children and dentists. Similar to the medical home model, the dental home model incorporates standard characteristics such as accessibility, family-centeredness, continuity, comprehensiveness, coordination, compassion, and cultural competence. To address the lack of a universally accepted definition of the dental home, an expert meeting was hosted by the Health Resources and Services Administration's (HRSA) Maternal and Child Health Bureau in 2008. From this meeting, four key components of a dental home were identified:

1. Access to care

2. Quality of care

3. Coordination of care

4. Provision of preventive care, including risk assessment

Furthermore, it was recognized that the dental home concept should involve a team approach, including dental hygienists, primary care health professionals, community-based health providers, and families. The current state of dental care delivery system calls for changes that align with patient-centered medical care innovations, such as integrated health home models that integrate dentistry.

In 2015, the Public Policy Center at the University of Iowa proposed the development of a new dental home model called the patient-centered dental home (PCDH). This model combines elements of the dental home and patient-centered medical home (PCMH) models to provide comprehensive, coordinated, accessible, patient- and family-centered care with a focus on quality and safety.

The patient-centered dental home project consisted of four phases, including:

1. PCDH Definition, with essential characteristics
2. Components of each essential PCDH characteristic
3. Measure concepts included in each component (work in progress)
4. Specific Quality Indicators, including Measures and Standards (work in progress)

During phase 1, through three rounds of the modified Delphi technique involving 49 nationally representative experts, consensus was reached on the definition of the patient-centered dental home. It was defined as "The patient-centered dental home is a model of care that is accessible, comprehensive, continuous, coordinated, patient- and family-centered, and focused on quality and safety as an integrated part of a health home for

people throughout the lifespan." Initially, eight essential characteristics were proposed, but through refinement and modification in phases 2 and 3, they were consolidated into six essential elements.

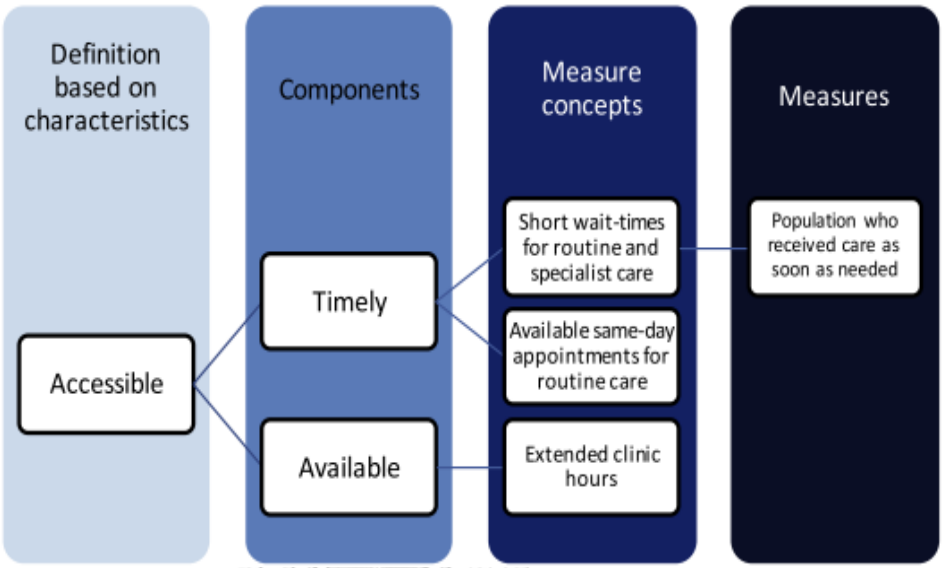

Figure 11 Patient-centered dental home 4 level framework with example.

1.2.7.1. Accessible

Access to the services refers to the broader meaning of the timeliness, the receipt of appointments for dental services as needed, either urgent treatment or routine care, and includes referral to specialist. Including accommodation aspects such as extended clinic hours and user-friendly system for patient requests (e.g., appointment making, prescription refills).

1.2.7.2. Comprehensive

Comprehensive service encompasses various aspects of oral healthcare, including oral health promotion, disease prevention, dental treatment, oral

health education, risk assessment, risk-based treatment planning, topical fluoride application, appropriate referral, and a team-based approach.

1.2.7.3. Coordinated

Facilitating efficient communication between dental and medical professionals is crucial. This involves integrating oral health records into the overall medical record or shared record system across different disciplines. Additionally, there should be coordination among oral health, social service, educational, and general health systems. Collaborative efforts within the community are essential to promote overall health. By recognizing and addressing population-level health issues, considering the diversity of the practice and community, proactive measures can be taken to remind and ensure necessary care for specific patient populations.

1.2.7.4. Continuous

Ensuring continuity of care is vital, including following up on necessary treatments such as completing the treatment plan, providing post-visit care, conducting oral evaluations after medical well-child visits, evaluating oral health after medical visits for pregnant women, patients with diabetes, and patients in long-term care, as well as following up after specialist referrals. The responsibility for providing care lies with the designated dental practice,

and it should be maintained as part of routine care, including completing recall exams in consecutive years.

1.2.7.5. Patient and family-centered

There were 6 components described this characteristic as:

1.2.7.5.1. Cultural competence

Patient and family-centered care should consider the unique aspects of each patient's race, culture, religion, beliefs, language, and gender.

1.2.7.5.2. Shared decision making

Information should be communicated using language and literacy levels that are easily understandable by the patient. If translation is required, it should be provided and documented with the patient's acknowledgement. Adequate time should be given for the patient to ask questions, seek clarification, and reflect on their decisions, taking into consideration the associated risks. Collaboratively, the patient and healthcare provider establish self-management goals. Informed decision making is crucial, and it necessitates the sharing of clear, evidence-based information about the health issue and available treatment options.

1.2.7.5.3. Sensitive to health literacy

Patient resources should be tailored to meet the communication needs and level of understanding of the specific patient population. Healthcare providers acknowledge that health literacy is a shared responsibility between both the patient and the provider, and they employ strategies to enhance health literacy. Providers ensure that they communicate with patients using language and information that aligns with the individual patient's level of health literacy.

1.2.7.5.4. Effective communication with patients

The healthcare provider should actively listen to the patient and engage in effective communication regarding treatment options, demonstrating respect for the patient. Adequate time should be allocated to address patient questions and concerns in a culturally and linguistically appropriate manner. It is important to assess the patient's comprehension of their oral health care needs and treatment plan. Patient involvement should be encouraged in developing the treatment plan and setting goals.

1.2.7.5.5. Individualized care

Care recommendations are tailored according to the patient's individual risk level for oral disease. Furthermore, care recommendations take into account patient preferences and

circumstances, such as affordability and the time required to complete different treatments. Another crucial aspect is offering multiple treatment options for various conditions, allowing patients to make informed choices based on what they believe is most suitable for their needs.

1.2.7.5.6. Equitable care

The assessment and resolution of access and care disparities are prioritized. Equal access to care is ensured for individuals across all socio-economic, cultural, racial, ethnic, and special population groups.

1.2.7.6. Quality and safety focused.

The emphasis is on ensuring both the quality and safety of care. Dental providers are expected to adhere to evidence-based and outcome-based practices. Dental clinics or care institutions should implement ongoing quality improvement processes, including the development of a quality improvement plan and the assessment of performance related to the plan's objectives.

1.2.8. Person-centered care model in dentistry by Lee H. et al(31)

In this study, the researchers conducted a literature review and proposed a model of care that prioritizes the individual and recognizes the interconnectedness of physical and oral health. To achieve optimal oral health, healthcare systems need to prioritize the well-being of individuals and society in decision-making processes, taking into account factors that extend

beyond the dental office. It has been found that physicians, genetics, and biology account for less than one-third of all health determinants, indicating that other factors such as personal circumstances, environment, and social factors play significant roles in overall health. To mitigate health risks associated with poor oral health and enhance overall well-being, a person-centered approach that integrates oral health into overall healthcare is crucial in the design and delivery of care.

Person-centered care begins by understanding the context and factors influencing a person's behavior and addressing barriers to health and disease prevention. The person-provider team then applies this contextual knowledge to develop interventions that promote positive health outcomes. Healthcare system designers play a vital role in empowering the person-provider team by creating an infrastructure that facilitates improved health outcomes. These designers include entities and systems such as hospitals, clinics, community organizations, medical and dental insurance entities (public or private), as well as local, state, and federal government bodies. Their primary responsibility is to design and implement a care system that enables meaningful and efficient person-provider relationships. This model identifies three key players as change agents, each with their respective roles and responsibilities.

1.2.9. Holistic Care in Dentistry: Concept towards Clinical Practices (132)

This article aims to review the concepts of “Holism”, “Holistic Health Care” and to

suggest the application of these concepts into dental practice. Holism is a philosophic concept in which an entity is explained as more than the sum of its parts. It is a balanced connection of all components which is dynamic depending on the individual's values and causal factors in a given context. Holistic health care aims to achieve the balance of physical, mental, spiritual and social dimensions. It considers the interrelationship of all contexts and the involving factors. It highly concerns the existence of humanized being, as well as understands and respects the patients' perspectives. In addition, holistic health approach provides health care through the integration of disease prevention, health promotion, treatment and rehabilitation under empathetic communication, patients' participation with the emphasis on the potentiality of self-healing. The researcher has proposed the important skills namely "5C 2P" for dental students to provide oral health care in the comprehensive dental clinic based on holistic health approach. The "5C 2P" skills comprise contextual concerns, cultural competency, communication, care, cure, prevention and promotion in order to have good health of the patients including physical, mental, social, and spiritual aspects.

Table 1 Literature review of patient/person centered care concept and model in dental care from year 2000 - 2020

Authors	Country/ year	Objectives	Methodology	Participants/Samples		Findings
				Dental professional	Patient/ parent/ carer	
1.Kulich P et al	Sweden/ 2003	To find the key elements in patient-centered care in dental phobia patients	Qualitative/ Interviewing	5 dentists practice in specialized hospital for dental anxiety patient	15 patients in specialized hospital for dental anxiety patient	3 key elements: 1. Holistic perception and understanding of the patient 2. The dentist's positive outlook on people 3. The dentist's positive view on patient contact. Under 6 subcomponents - empathy, equality, dignity, emotional understanding, respect, and participation
2.Loignon C et al	Canada/ 2010	To identify specific approaches and skills developed by dentists for treating people living in poverty	Qualitative/In -depth interview	eight dentists practicing in the unequaled community of Montreal, Canada.	-	5 elements: 1. Understanding patient's social context 2. Taking time and showing empathy 3. Avoiding moralistic attitudes 4. Overcoming social distances 5. Favoring direct contact with patients

Authors	Country/ year	Objectives	Methodology	Participants/Samples		Findings
				Dental professional	Patient/ parent/ carer	
3.Scambler A et al	UK/ 2014	To explore the nature of patient-centered care, patient-centered care teaching methods and how to practice.	Qualitative/ Interviewing	20 dental professionals working in clinical and teaching positions within dental schools	-	4 foundation components: 1. Exploring illness/disease and the context in which it occurs. 2.The patient as a whole person. 3.The ethos of the healthcare professional-patient relationship 4.The process of doctor-patient relationship: reaching common
4.Apelian N et al	Canada/ 2014	To develop a model of person-centered care in dentistry	Qualitative/ the author practicing other health professional existing models one	The author practicing in his dental clinic and discuss with his 2 co-authors (dentist and psychologist)	-	4 components are 1.Understanding illness and disease 2.Decision-making 3. Intervention 4. Humanist equal-powered of patient-dentist encounter

Authors	Country/ year	Objectives	Methodology	Participants/Samples		Findings
				Dental professional	Patient/ parent/ carer	
			by one in his dental office and modified the approach itinerary until finally concluded and presented a new model			
5.Mill et al	England/ 2015	To develop an understanding of the key features of person-centred care in relation to	Qualitative, interviewing	-	20 patients and carer or parents in the southwest of England, both	Five components of patient-centered care were identified as: 1. Connection 2. Attitude 3. Communication 4. Empowerment

Authors	Country/ year	Objectives	Methodology	Participants/Samples		Findings
				Dental professional	Patient/ parent/ carer	
		general dental practice from a patient's perspective			in the cities and within rural communities	5. Feeling valued
6.Demiano P et al/ Patient centered dental home	USA/ 2016-in progress	To develop the first standardized definition of the patient-centered dental home in USA context and to develop the characteristics, components, concepts and	Qualitative/ Delphi technique	49 experts including heteroge-neous group of experts representing dental care, medical care, public health, health services research, health		6 main characteristics of patient-centered dental home: 1. Accessible 2. Comprehensive 3. Coordinated 4. Continuous 5. Patient-family centered 6. Quality and safety focused

Authors	Country/ year	Objectives	Methodology	Participants/Samples		Findings
				Dental professional	Patient/ parent/ carer	
		measure of patient-centered dental home		policy, and accrediting bodies		
7.Lee et al	USA/ 2018	To develop a model of patient-centered care in dentistry	Review literature	-	-	To prevent any health risks originating from poor oral health and to improve overall health and well-being, a person-centered care approach that integrates oral health into overall health must be a critical element in both care design and delivery through model including person, provider and care designer.
8.Noushi et al	Canada/ 2020	To understand the experiences and expectations of disadvantaged people regarding dental care and to	Qualitative, interviewing	13 clinical users living in poverty in Montreal, Canada	-	4 elements of patient's perspective in patient centered dental care 1. Building mutual trust 2. Caring for the whole person 3. Expressing empathy and sensitivity 4. Providing sufficient and clear information

Authors	Country/ year	Objectives	Methodology	Participants/Samples		Findings
				Dental professional	Patient/ parent/ carer	
		contribute to the development of person-centered dentistry.				
9.Hunsrisakhum	Thailand/ 2010	to review the concepts of "Holism", "Holistic Health Care" and to suggest the application of these concepts into dental practice	Review literature	-	-	5C2P consist of 1. Contextual concerns 2. Cultural competency 3. Communication 4. Care 5.Cure 6. Prevention 7. Promotion

Based on the nine patient-centered care models in dentistry, the researcher categorized them and laid them as a guideline for the development of a patient-centered care measurement tool of dentists as shown in Table 2 and Table 3.

Table 2 Concepts and model finding from nine literatures categorized by clinical encounter, interpersonal communications, and structure/management.

Authors/Model	**Clinical encounter**	**Interpersonal communication**	**Structure/ management**
1.Kulich et al.	1.Holistic perception and understanding of the patient 2. The dentist's positive outlook on people 3.The dentist's positive view on patient contact. Under 6 subcomponents - empathy, equality, dignity, emotional understanding, respect, and participation	-	-
2.Loignon et al.	1.Understanding patient's social context 2.Taking time and showing empathy 3.Avoiding moralistic attitudes 4.Overcoming social distances	5.Favoring direct contact with patients	-
3.Scambler et al.	1.Exploring illness/disease and the context in which it occurs 2.The patient as a whole person	3.The ethos of the healthcare professional-patient relationship 4.The process of doctor-patient relationship: reaching common	-

Authors/Model	Clinical encounter	Interpersonal communication	Structure/ management
		ground/sharing responsibility	
4.Apelian et al	1.Understanding illness and disease 3.Intervention	2.Decision-making 4.Humanist equal-powered of patient-dentist encounter	-
5.Mills I.	1.Attitude 2.Valued 3.Empowered	4.Connection 5.Communication	-
6. Demiano P et al	5.Patient-family centered 5.1 Cultural competency 5.4 Individualized care 5.5 Equitable care	5.Patient-familty centered 5.2 Shared decision making 5.3 Sensitive to health literacy	1.Accessible 2.Comprehensive 3.Coordinated 4.Continuous 6.Quality and safety focused
7.Lee	-	-	Discuss about the role of person, provider and care designer in patient-centered dental care
8.Noushi et al	1.Building mutual trust 2.Caring for the whole person 3.Expressing empathy and sensitivity	4.Providing sufficient and clear information	
9.Hunsrisakhun	5C2P consist of 1. Contextual concerns 2. Cultural competency 3. Care 4. Cure 6. Prevention 7. Promotion	5.Communication	

Table 3 Crosstab between authors and domain from nine studies of patient/person centered care model in dentistry.

Domains \ Authors	1. Kulich et al., 2003	2. Hunsrisakhun, 2010	3. Loignon et al., 2010	4. Scambler et al.,2014	5. Apelian et al., 2014	6. Mills L., 2015	7. Demiano P. et al., 2017	8. Lee, 2018	9. Noushi et al., 2020
1. Communication		✓	✓			✓			
2. Disease-Illness management	✓	✓		✓	✓				
3. Whole person/ Human being	✓	✓	✓	✓	✓	✓	✓	✓	✓
4. Shared information and decision-making	✓	✓		✓	✓	✓	✓		✓
5. Dentist-patient relationship	✓	✓		✓	✓	✓			✓
6. Empathy	✓	✓	✓	✓		✓			✓
7. Continuation of care						✓	✓		
8. Comprehensive care		✓				✓	✓		
9. Coordinated care							✓		

1.3. Patient-centered care in Thailand

1.3.1. Patient-centered care in health care in Thailand

In the past, we have had doctors serving the definition of family medicine for a long time. The doctors at that time would take care of the whole family and know the

members of each family very well. Nevertheless, as modern medicine has grown so fast, doctors are increasingly turning to new technology and choosing to study or care for specific diseases, diminishing physicians who used to practice patient-centered family medicine. Family medicine was revived, starting at the Faculty of Medicine, Chiang Mai University, in 1981, with the view that this field could solve the country's public health problems. Family medicine was born to meet the needs of society; that system required medical quality and patient-centered or person-centered care. It is the sum of scientific and medical knowledge. It can follow modern technology with an atmosphere that feels humanity and compassion for each other. It can close the gap between doctors in large hospitals, often needing more human or patient-centered competency, and primary care physicians, who often need more knowledge and modern technology(133).

However, an establishment of family medicine could not change much of style of physician approach which still disease- or doctor-oriented. A study by Pongsupap Y. in 2007(133), the whole patient and involving him/her in the decision-making process of problem-solving also contributes to a more committed attitude on the side of the patient. In other words, the whole-person approach, which certainly includes the human dimension of care, can be expected to be more effective. Responsiveness to people's non-medical expectations is a problem in Thai health services, particularly in public facilities. More worrisome is the patient-centredness. Patients need counseling and listening. This

is as important a therapeutic tool as drugs or surgery. At that moment, no health provider sees it as specific to his job to fulfill this function.

In Thailand's education system, bachelor's degree qualifications are used for monitoring and as a frame of the curriculum in any field of bachelor's degree education. Like other fields of education, health professional education also has bachelor's degree qualifications; most identify the desirable attributes for each health professional graduate, but none directly mention patient-centered or person-centered (134-137). Only a medical bachelor's degree qualification is written for people-centered care (138). However, there are a variety of soft-skilled competencies that are described in medical, dental, nursing, pharmacy, and public health qualifications, such as holistic, comprehensive, multidisciplinary, doctor-patient relationship, communication, continuity of care, dignity, empathy, compassion, value, ethic, and so on (135-138).

Even though there has not been mention of patient-centered in health professional education qualifications but for decades, many research topics on patient-centered or person-centered care have been conducted, mostly in medicine and nursing care, especially family-centered nursing care(138-141). One of the key success factors in quality nursing care is patient-centered care, both in self-assessment and patient assessment. In various healthcare settings and diseases, studies found success using patient-centered care. It could promote self-management in persons with diabetes in the community(138). Palliative care was able to improve with patient-centered approach in

district health system(140, 142). To enhance the quality of medication use, it is essential to adopt the primary health care concept and integrate pharmaceutical care services within a framework of patient-centered care. This approach fosters collaboration among healthcare professionals and promotes active community participation. Implementing these strategies aims to improve the overall management of medications and optimize patient outcomes (141). A patient-centered approach should be used as a component of pre-arrest care standards for crisis prevention in general hospitals (143). Evidence shows that patient-centered medical care can improve patient health outcomes, quality of life, and the doctor-patient relationship. Using patient-centered medical interviewing can increase the detection and understanding of difficult patients across cultures (144). A study in the primary care unit in Thailand found that patient-centered care and continuing care by the same doctor have benefits in achieving blood pressure outcomes (145).

Hospital accreditation organizations in Thailand include patient-centered care as one issue in the required measurement of the accreditation process. Recently, it has been moved forward the standard beyond humanized health care to spiritual health care, which takes more seriously spiritual practice and spiritual quality of care aimed to be safe, standard, sensible, sustainable, and humanistic, along with the appreciation of the patient, family, health worker, and community (146-148).

Although patient-centered care is a useful concept for improving the quality of care and health outcome, to Put this concept into practice, there are still obstacles for

both patients and healthcare providers, which makes the patient less involved and is associated with insufficient knowledge and understanding of the illness(52, 54). It also relates to patient attitudes in care and relationship with healthcare providers, patient lack of confidence in participation, and unsupported personnel and systems (53, 54). Another barrier was personnel barriers; many studies in nursing care found that obstacles were caused by team, personal and organizational issues, which were mutual understanding in the health team about patient-centered care, personal problems from lack of motivation due to hard work, less payment and human resource management problems, such as team conflicts, lack of support for self-development, unsupported and appreciated (53, 55). Health professionals also have the attitude that they think they understand the concept and have put it into practice, but in fact, they need to be more right (55). One of the major obstacles to applying the concept to the service provider is by needing to understand concepts and attitudes that have not changed, so preparing service providers is an important part of bringing the concept of care that takes service users into effective action (56).

Patient-centered care have been more interested again since 2014, the Minister of Public Health, Prof. Rachata Rachatanavin, had the policy to develop a primary health service system to care for the population of all households covering all areas. “Family Care Team” (family care team: FCT) is responsible for all households with patient-centered care. Each team is supervised by staff from the health center, and a

doctor from the community hospital acts as a consultant. This includes the emergence of multidisciplinary teams and other proactive service sectors in the community (66), reflecting the importance of providing primary health services. It links to the interaction of community health systems with all healthcare systems.

In 2017, the new constitution of the kingdom of Thailand B.E.2560 (2017 C.E.) stipulated that citizen should have an appropriate portion of family physician(57). Two years later the parliament of Thailand has been passed the primary health care act mentioned that family physician should work with a group of allied health professional with patient-centered care in primary care setting. This shows that Thailand is strongly committed to primary health care reform to provide people with access to care, good quality services, and cost containment.

Hence, the health profession has become concerned with patient-centered or person-centered concepts following the direction of the new constitution and primary health care reform. Many health professional institutes such as nursing, medical, pharmaceutical, physical therapy, dental, and other institutes involved in healthcare human resource development have released new short-period training courses for these professionals to be trained and gain more competencies to practice in a new style of primary health care. The courses' concept emphasizes on family practice concept, which uses a patient-centered or person-centered approach so mostly namely a family- or primary- in all these courses such as "family and primary care nurse short course",

"primary and family pharmaceutical", "primary care physical therapy", "Dental public health (family dentistry) 4-month short course" for example(149).

1.3.2. Patient-centered care in dentistry in Thailand

In the past, patient-centered concepts were discussed, such as holistic care, inclusive care, and patient care regardless of race, culture, religion, and beliefs, including information and options for dental treatment must be provided. Most of this discussion appeared in curriculum papers, dentist qualification documents, and the standard of practice. Even though Thailand has a standard of practice or code of ethics for the dental profession like other countries but not written patient-centered directly, there are some concepts or similar components (59-61, 150, 151). The code of ethics for the Thai dental profession, launched in 1994, has three principles with 24 items. There are three concepts related to patient-centered care that can be extracted from 24 items 1) Dental practitioners must practice regardless of patient status, race, nationality, religion, and social and political issues 2) Dental practitioners must inform about the detail of treatment and choices of treatment including the price of them if requested. 3) Dental practitioners must treat patients with courtesy, kindness, good interpersonal relationships, and freedom from coercion (152).

All of the Doctor of Dental Surgery curricula in the dental schools in Thailand also makes no mention of the patient-centered care concept (59-61, 150, 151). Several concepts and competencies close to the meaning of patient-centered or person-centered

are written in the curricula, bachelor's degree qualifications of dentistry or desirable characteristics of dental graduate, professional competency, table of specification of the Dentist by the Center of dental competency assessment and Accreditation (CDA), and terms of specification of general dentistry (153)such as holistic, humanized, comprehensive, continuity of care, ethical, dignity and context care. There is no universal definition of patient-centered or person-centered care in dentistry in Thailand.

The Thai bachelor's degree qualifications of dentistry(134) are described attributes related to human soft-skilled competency such as

1. Consider the benefits and rights of patients. By treating patients equally with compassion and recognizing human values.
2. Able to promote health, disease prevention and care for dental patients by considering the holistic of patient and the professional standards appropriately. Including providing advice and guidance to lead to care that is consistent with the needs and expectations of the patient.
3. Be aware of the limitations and level of their competencies. As well as consider referring to the patient appropriately.
4. Communicate and interact with patients, co-workers and guests with courtesy and respect including being a leader and followers according to the context.

The Thai Doctor of Dental Surgery curricula in most of dental schools said

about holistic, humanized care, and preference and need of patient. In the course syllabus of comprehensive dentistry of dental school of Chaing Mai University (150)discusses the topic of patient-centered care, doctor-patient relationship and communication skills. At the Faculty of Dentistry of Prince of Songkla University(61), several subjects are taught, focusing on patient-centered concepts. These include studying holistic health, exploring the meaning and concepts of holistic health, comparing reductionist and holistic paradigms, examining sociological aspects of health, illness, and sickness, understanding health and illness as social constructs, and analyzing phenomena related to holistic health. Communication for Medical Science covers the provider-client relationship in healthcare, applying holistic health concepts in communication, and fostering human understanding in practice. The New Consciousness subject delves into developing mindfulness and self-awareness in the present moment, cultivating a peaceful and neutral mindset in daily life, applying mindfulness in various activities, and understanding thoughts and emotions. Additionally, it emphasizes understanding oneself and others, embracing happiness and sharing, and discussing the appreciation and acceptance of diversity in multicultural settings. The Happy and Peaceful Life subject explores various cultures, pursuing happiness, embracing and respecting differences, fostering teamwork, promoting peace, developing communication skills, and utilizing creative problem-solving approaches in diverse societies.

At Konkaen University's dental school(151), some subjects focus on patient-centered care. The "Happiness of Life" subject explores the concepts and significance of leading a happy life, understanding the different dimensions and levels of happiness, cultivating an artful and fulfilling lifestyle, and incorporating virtues and ethics for a joyful existence. The "Civic Engagement" subject delves into civic engagement, examining various patterns, contexts, and factors to consider at different societal levels. It explores the roles of individuals and others in collaborating for civic engagement and emphasizes self-development for a happy and harmonious life within society.

At Naresuan University's faculty of dentistry(59) , some subjects encompass patient-centered care. The "Living Management" subject explores knowledge and skills related to individual roles, responsibilities, and obligations within a family and society. It includes topics such as adapting to global societal changes, effective communication worldwide, conflict resolution strategies, and methods for fostering creative problem-solving that contributes to improved living conditions, economic well-being, and ethical society. The "Life Skill" subject focuses on personality development, encompassing mental and physical characteristics. It emphasizes the cultivation of teamwork skills, with an emphasis on leadership and followership roles. Additionally, it promotes the development of public awareness and other desirable personal attributes.

The dental hospital of faculty of dentistry Chulalongkorn University(154) announced the missions, one of which is committed to providing dental services that

meet standards covering the tertiary level by focusing on patient-centered and establishing standards for dental service practices. In addition, the community dentistry subject of Chulalongkorn University discusses fieldwork in a real community with humanized healthcare topics (155).

There needs to be more evidence literature on patient-centered or person-centered care and related concepts in Thailand. These are eight examples of studies found in the dental field.

1) Patient feedback with patient-centered dental care and its association with emotional intelligence: A cross-sectional study in undergraduate dental students at Prince of Songkla University (156)

The study was conducted on dental students providing patient-centered dental services in the School of Dentistry, Prince of Songkla University, to study the relationship of the emotional intelligence of dental students with the level of patient-centered care. The sample consisted of 116 5th and 6th-year dental students and at least five patients for each student inclusion criteria of these patients: 1) aged 18 years, 2) received comprehensive dental treatment from that student four times, and 3) their last visit not more than two months. They were randomly selected and contacted. Each dental student completed the Department of Mental Health's Emotional Intelligence Questionnaire (DMH-EI), comprising 52 self-assessment items and nine domains. A tool was developed to measure the level of patient-centered care divided by service processes.

The sample answered a 21-item questionnaire about experiences, feedback, and overall satisfaction with patient-centered dental care via phone. This research found that students with high emotional intelligence scores positively correlated with their patient-centered care scores.

2) Essence of comprehensive dentistry scrutinized from dental care experience of advanced general dentists (157)

This research study employed a qualitative approach to explore the concept of comprehensive dentistry and its implications for dental care. The data collection involved conducting in-depth interviews with dentists specializing in general dentistry. A sample of 20 volunteers was randomly selected for participation, and their interviews were recorded using audio recorders while notes were also taken. The data were subsequently analyzed through content and thematic analysis.

The findings revealed four key aspects of comprehensive dentistry: compassionate care, integrated approach to dental and mental health, patient-centered treatment, and multidisciplinary care. Active listening by the Dentist to the patient was identified as crucial. Treatment plans were designed to align with the patient's needs and dental expertise. Such comprehensive care outcomes included patient satisfaction and a positive dentist-patient relationship. The concept of comprehensive dentistry encompassed both academic knowledge and an understanding of human nature.

Therefore, dentists aiming to provide comprehensive dental care should continuously enhance their knowledge, treatment skills, and interpersonal abilities. By doing so, they can contribute to their and their patients' overall happiness and well-being.

3) Effect of Teaching Program on Oral Health Literacy and Patient-Centered Communication Promotion (158)

This research aimed to assess the effectiveness of instructional programs to promote oral health literacy and patient-centered communication. The sample group was first-year undergraduate dental students who had yet to complete the learning management program. Simple randomized 60 students, then randomized allocation to control and experiment group for 30 students each. A learning management program to promote health literacy and patient-centered communication behaviors of dental students was developed and implemented, including six times teaching program, 3 hours each time, using various teaching technics. The Oral Health Literacy Questionnaire was adapted from the HLS-EU-Q47 to fit the context of dental students in Thailand. The findings revealed that dental students who participated in the experimental group demonstrated a statistically significant increase in their mean scores after the experiment compared to their pre-experiment scores. Furthermore, the dental students in the experimental group exhibited higher mean scores immediately after the experiment than those in the control group. These results suggest that incorporating this program into the general education courses of the dental curriculum would be beneficial.

4) Concepts of Health and Humanized Health Care in Comprehensive Dental Care, (62)

A review concept paper was aimed at clarifying the meaning of health and humanized health care in comprehensive dental care. Comprehensive dental care means comprehensive care in all forms as the individual needs. Using the holistic concept that a person's organs are essential parts that make up the individual, family, community, and society, therefore, in the dental care of the complex, it does not consider specific organs. In the oral cavity alone, it focuses on both the teeth and the organs involved. It is either whole-person or patient-centered care, which must consider biological, psychological, and social factors (biopsychosocial factors). Giving priority to building a positive relationship between dentists and patients. Provide the treatment process that meets the needs of the patient. Correspond to different mental states, limitations, and contexts to allow patients to lead a balanced life between each dimension and conventionally appropriate. The path towards comprehensive patient care should begin with learning the concepts of holistic healthcare and humanized care to apply to dental services.

5) Humanized dentistry.(63)

This article was a review of related documents to present the issue of "Humanized Dentistry" in public health personnel in the clinical anthropological perspective and experience. Dentistry experiences that appear in literary writings. For this reason, clinical or biomedical treatment is possible only if that treatment is effective. It continues in the form of a "healing robot" only. The learning system in the field of

biomedical science has changed people from ordinary people. One is to become a kicker and the humanity of the student to disappear. The more people we interact with - on the other hand, we may be less likely to see other dimensions of the people we interact with. For example, the plaque control in patients with periodontitis, how better to plan the treatment and control of microorganisms one by one, we may be neglecting human dignity. It leads to the preliminary proposal that focuses on the complexity and diversity of the meaning of human life and body and to focus on the uniqueness of humanity. The patient's feeling during the interaction between the Dentist and the patient is a very important starting point for humanized dental care.

6) Biomedical science discourse and dentists' oral health promotion concepts: A case study in Chiang Mai. (159)

The purpose of this study was to study the medical discourse. Science and the concept of health promotion through the oral health practice in the Chiang Mai provincial health service system and through the educational process of the faculty of dentistry at Chiang Mai University. It was analyzed by identifying information, interpreting, and giving meaning according to various issues. The study found that dentists needed help to differentiate their differences between health promotion and disease prevention. Dentists' understanding of oral health promotion was primarily grounded in the biomedical science perspective, which emphasized disease management and targeted high-risk populations. Dentists have always been used to describe oral

disease under epidemiological and biochemistry mechanisms. The medical sciences model that followed the concept of oral health promotion by the Dentist was created. It was created and reproduced within the dental education system and in the health service system of Chiang Mai Province. Health promotion is related to the biomedical culture system, the science of dentistry, and the public health bureaucracy. The need to reform both the dental education system and the health service system is to emphasize health rather than oral disease and prioritize patient-centered care instead of specific to each person's teeth.

7) Oral health care in Dementia: A case report of patient-centered approach of multidisciplinary team, (160)

Dementia reduces the potential for self-care, such as cleaning the mouth. The patient cannot do this, it needs to be stimulated by dependent caregivers, and the caregivers cannot do it easily. Difficulty from the patient and the burden of other daily activities resulted in the progression of oral disease, including tooth decay and severe gingivitis. Symptoms of pain cause the patient to refuse to clean the area. Treatment in dental clinics to address the threats that impede oral hygiene, skills, and accessories to enable the development of appropriate care for both patients and caregivers. For specialists with specific knowledge of various fields, including doctors, dentists, and nutritionists, the perspective of looking at people and family as the starting point in taking care. This makes it possible to provide tailored care for a comprehensive exchange of

knowledge and skills. Importantly, seeing the whole person before seeing the disease can help multidisciplinary teams to work in bridging, not dividing people into parts of organs (Coordinate care) care. With a multidisciplinary team, information will be used to design the care Patient-Centered Medicine) is to understand patients with both disease and other illnesses, including understanding the whole picture of the family from the assessment and planning of family-based care (Family-Oriented Care: "The Family as a Patient"). Acknowledge the phenomena that arise partly from the social and family structure in which good relationships are established. Essential tools for exchanging appropriate care styles and encouraging each family to take care of each other in the future.

Another issue related to patient-centered found in Thai literature and related documents are ethic and ethical lawsuit, which involved the communication skill and holistic approach of dentists to reduce lawsuit.

1) The risk of dental service behavior for the grievance among Thai dentists, (161)

The four aspects included in this study were the patient's unrealized expectations regarding dental service provider's behavior, insufficient communication, substandard service behavior, and unethically commercially oriented behavior, data collected by a survey of 366 dentists. The study found that all four aspects at a low level implied they should implement some strategies to improve.

2) The study of dental ethics lawsuits prosecution of The Dental council of Thailand 2002-2019.(36)

The objective of this retrospective study was to prosecute the situations in dental ethics cases, the result of dental ethics litigation. This study was conducted on all 322 cases of dental ethics lawsuit data of The Dental Council of Thailand from 2002 to March 2019. The data analyzed and found that the operation and behavior had misconduct and unethical were advertising, orthodontic and aesthetic dentistry, conduct, and curative dentistry, and almost 50 percent of dentist behavior was due to poor communication, ignorance, impolite and disrespectful dignity of people. Punishment was admonishing, probate, suspending the license, and revoking the license.

Professional dental organizations involved should have a clear and clear policy and guidelines on dental professional ethics. It can be applied in practice, such as dental advertising practice guidelines. Current dental treatment practices and to promote a systematic continuing education to assure the quality of dental treatment, including continuing education in the legal and ethical issues of dentistry for dental practitioners, etc. Nowadays, continuing education can be made easier and more convenient such as attending online academic conferences. Educational institutions that produce a greater number of dentists both in the public and private sectors. Both in the country and abroad, the Dental Council certifies there should be a more holistic and patient-centered curriculum than today with a predominantly academic focus. Legal courses, medical ethics courses, and soft science courses should be added to the dental study program.

Certified before going into the process of applying for a professional license, all of which will benefit the dental profession of Thailand in the future.

2. Measurement of patient-centered care

Numerous studies have examined the assessment of patient-centered care, generating significant interest among various stakeholders such as academics, researchers, policymakers, hospital administrators, healthcare providers, insurers, public health professionals, and service users. Over time, the measurement of patient-centered care has undergone extensive development, with the creation and utilization of various instruments that have been tested for validity across different settings and populations worldwide (14).

The measurement of patient-centered care serves multiple purposes. Primarily, it aims to enhance the quality of care, thereby improving health outcomes. Additionally, it serves as a tool to evaluate the performance of healthcare providers and determine the reimbursement systems in certain countries' health insurance frameworks.

The Health Foundation conducted a review in 2014, identifying four measurable aspects of person-centered care: 1) Definition, 2) Preferences, 3) Experiences, and 4) Outcomes.

Numerous entities are involved in the measurement of patient-centered care, including patient groups, clinicians, managers, service planners, commissioners, quality assessors, regulators, policymakers, and researchers(27).

The measurement of patient-centered care can occur at various stages of the healthcare service, whether it is before, during, or after the service, depending on its specific context.

Although patient-centered care measurement has predominantly focused on hospitals, there has been a growing trend toward exploring this concept in primary and community care settings. Furthermore, nursing homes and other specialized care centers have also received attention in this regard.

2.1. How to measure patient-centered care?

As the conceptual framework or definition of patient-centered care is unclear. The measurement is based on the individual interpretations of each tool developer. The dimensions of measurement and interpretation are there for different. However, there are three main methods of measuring patient-centered care: 1) self-assessment by the healthcare provider, 2) assessment by patients or service users, and 3) assessment by others by observing healthcare worker services directly to the patient or simulating patient use of the service (1, 14, 133, 162, 163).

2.1.1. Self-assessment by healthcare provider

It is the most widely used method (133). There have been suggestions that the practice of patient-centered care is influenced by physicians who possess specific attitudes, values, personality traits, or cognitive patterns. These psychological attributes are often assessed using self-report inventories. However, when utilizing such inventories, it is crucial to address several reliability considerations.

One important aspect is ensuring satisfactory internal consistency of the measure. However, when aiming to capture the multidimensional nature of patient-

centered attitudes, it is essential not to excessively restrict the content of the inventory in an effort to achieve a high alpha coefficient. It is possible for a very brief scale to still demonstrate reliability, particularly if the constituent items share similar content. However, the accuracy may be relatively lower due to the limited scope of the measured qualities.

Demonstrating the structural validity of self-report measures is crucial because there is no definitive criterion to compare them against.

2.1.2. External Observation

The majority of empirical studies define patient-centeredness as a clinical approach, and this is reflected in the prevalent use of measures that focus on observing behaviors during consultations. There are three main approaches that have been utilized in this regard:

1. Rating scales: These scales assess the extent or quality of specific behaviors exhibited during the consultation.

2. Verbal behavior coding systems: These systems involve categorizing and analyzing the speech units of both the doctor and the patient.

3. Combined methods: This approach combines elements from both rating scales and verbal behavior coding systems to capture a comprehensive understanding of patient-centeredness.

These approaches enable researchers to assess and quantify patient-centered behaviors in clinical settings.(163).

2.1.3. Simulated client method.

For more than three decades, the simulated client method has been employed to investigate the behavior of healthcare providers in a direct manner while minimizing observation bias. Particularly in developing countries, this method has proven to be valuable in studying the practices of physicians, drug retailers, and family planning services. In this method, research assistants assume the role of simulated clients who present fictitious case scenarios, stable conditions, or genuine interest in the services being studied. The providers are unaware that these clients are involved in research. Subsequently, the simulated clients provide detailed accounts of their interactions during the visit, which are then analyzed. The use of simulated or standardized patients in clinical settings has been extensively documented in the literature. Descriptive studies, often comparing field findings with established care standards or serving as formative phases for intervention planning, constitute the majority of published research from developing countries. Furthermore, interventions designed to enhance provider practices

have been evaluated using simulated clients. Given the growing emphasis on healthcare quality assurance, the simulated client method warrants thorough examination as it represents a powerful tool in this domain..(164).

2.2. Measurement patient-centered care in dental care

Although patient-centered care is being studied more in dentistry, understanding the meaning of it remains vague. Moreover, research on this measurement of care competency is rare. The literature reviewed found limited studies to measure patient-centered care in dentistry.

Most of the literature found was a measure of behavior, attitude, or experience of care related to patient-centered care concepts such as satisfaction, dentist-patient relationship, communication, empathy, shared decision-making, and trust in dental care. In contrast, some studies have focused on these features correlating with patient-centered care practices.

Like the medical field, there are two main measurement methodologies in dental care: dentist self-assessment and external assessment by the patient or third party. The annual result of the patient-report CAHPS dental plan survey was a useful tool for dental insurance carriers to assess insurance sources and compare the different dentists(165). By adhering to the principles of patient-centered care and patient-family-centered care, dentists have the opportunity to enhance clinical outcomes and improve patient satisfaction. By tailoring their approach to align with the expectations of patients and

their parents, dentists can optimize the care and attention they provide. A study highlighted the significance of effective and empathetic dentist-patient communication, particularly during emergency or out-of-hours consultations (166). This finding suggests that the abilities of dentists to listen, explain, and reassure should be included in any patient satisfaction or outcome measurement tools specifically designed for this patient population. The observed associations with services indicate that the quality of care delivered can be influenced by the provider-patient relationship. Therefore, modifications to the provider-patient relationship may lead to changes in dental practices, which should be taken into account when considering the impact of dentist preferences on patient satisfaction and oral health outcomes (167).

Regardless of how the measuring instrument is used, it is important to keep in mind what the purpose of the measurement is. In particular, the results of that measure can lead to improvements or changes to better service quality and to better health outcomes. Methods used to measure person-centered care can be classified based on the level of detail they offer and the extent to which they capture information applicable to a wider population. For instance, while interviews and group discussions can offer valuable insights, they may be less suitable for making broad demographic decisions or implementing service changes. Surveys, on the other hand, provide information that can be more easily summarized for a larger group, but the data collected is often at a superficial level. Prior to exploring how to measure person-centered care, it is advisable

for teams to spend time establishing a comprehensive definition of this concept and its components. A clear definition will guide the healthcare team toward the intended goal and facilitate the measurement process(14).

Table 4 Examples of validated tools used to measure person-centered care have used in dental care

Concept	Measurement approaches	Example of structured tools
1. Holistic concept of person-centered care		
Patient-centered/ person-centered/ individualized/ family-centered care	Patient report	• Patient feedback on patient-centered care: PFPCC (168)
2. Components/subcomponents/concepts related of person-centered care		
Patient satisfaction/experience of care	Patient/customer report	• Customer Assessment of Health Provider and System: CAHPS(46, 165) • Dental Visit Satisfaction Scale: DVSS(162)
Empathy/compassion/dignity	Self-report by professionals Patient report	• Jefferson Scale of Empathy-Health professional (JSE-HP)(169, 170) • Consultation and Relation Empathy (CARE)(171) • Toronto Empathy questionnaire (TEQ) (172) • Person-centered Care Index (PCI)(120)

Concept	Measurement approaches	Example of structured tools
Dentist-patient relationship	Patient report	• Dental Trust Scale(173) • Dental Satisfaction Scale(49) • Dental Anxiety Scale (48) • Patient-practitioner orientation scale: (PPOS)(174)
3. Behaviors or extent supporting person-centered care		
Person- centered communication	Patients report Self-report by dental student	• Patient communication assessment instrument: PCAI (175) • Patient questionnaire: PAQ(176) • Student communication assessment instrument: SCAI (175)
Shared decision making	Patient report	• EndoDB(177)
Anxiety	Patient report	• Dental anxiety scale (48)

The researcher analyzed and synthetized the domains of patient/person centered care from the nine existing models as in Table 2 and extracted some example questions from existing tools that measure these domains as show in Table 5.

Table 5 Examples of questions in existing instrument measuring patient-centered care or relevant domain of patient-centered dental care

Domain	Concept	Measure	Self/patient report	Source/ tool
1.Communication	Connection/ greeting	Greeting you in a friendly way, not being grumpy or rude to you.	Patient report	PAQ
	Verbal and non-verbal	How often did the dentists or dental staff explain what they were doing while treating you?	Patient report	AHRQ/ CAHPS dental plan survey
		Sometimes dentists do not pay full attention to what patients are trying to tell them	Patient report	DTS
	Two-way communication	Asking you questions about your reasons to visit and listening carefully to your response.	Patient report	PAQ
		Dentist explains things in a way that was easy to understand.	Patient report	AHRQ/ CAHPS dental plan survey
	Active or deep listening	Dentist spent enough time.	Patient report	AHRQ/ CAHPS dental plan survey

Domain	Concept	Measure	Self/patient report	Source/ tool
		Dentist listens carefully	Patient report	AHRQ/ CAHPS dental plan survey
2.Disease and illness	Idea, feeling, function and expectation	Dental student asked your feeling when he is giving you treatment.	Patient report	PFPCC
3.Whole person/Holistic	Bio-psycho-social elements of patient/Family/ Friend/Social context/oral health and overall health	Between examination and history taking, dental student asked you about your general data, e.g., family, life, job, etc.	Patient report	PFPCC
		Dental student asked you about your life during every visit	Patient report	PFPCC
		Dental student gave you an opportunity to talk about your behavior or experience that may be because of your oral health problem.	Patient report	PFPCC
		Other than gave treatment, dental student always gave you information	Patient report	PFPCC

Domain	Concept	Measure	Self/patient report	Source/ tool
		about oral health.		
	Preference/Value/ Need/ /Individualized care	Did your dental plan cover what you and your family needed to get done?	Patient report	AHRQ/ CAHPS dental plan survey
		How often did your dental plan cover all the services you thought were covered?	Patient report	AHRQ/ CAHPS dental plan survey
		Dental student used your opinion and limitation for adjust the plant to suit you	Patient report	PFPCC
		The patient's individuality and unique qualities inform care	System assessment	PCI
		Personalized services are aimed at attaining high quality and excellence.	System assessment	PCI
4.Shared decision making/ Finding common ground	Informed choice of treatment adequate and	Health care provider talk with parents about the pros and cons of each choice for child's treatment or health care	Patient report	AHRQ/ CAHPS health plan survey

Domain	Concept	Measure	Self/patient report	Source/ tool
	efficiency			
		Health provider tells you there was more than one choice for your child's treatment or health care?	Patient report	AHRQ/ CAHPS health plan survey
		Dental student gave you enough information about treatment options and explain details of each option, including advantage, disadvantage, time consuming, cost, and risks, to help you decide.	Patient report	PFPCC
	Empowerment to care	Dental student made you believe that you can take care of your oral health well and prevent recurrence of oral health problems	Patient report	PFPCC
		Diagnosis of health status, experience, and contributory factors involve shared understanding	System assessment	PCI
5.Dentist – patient relationship	Mutual trust	You have no worries about putting your oral health in the hands of the dentist.	Patient report	DTS
		Inspiring your trust and confidence; never nervous or unsure of his/herself	Patient report	PAQ
		Sometimes dentists care more about what is best for them than about	Patient report	DTS

Domain	Concept	Measure	Self/patient report	Source/ tool
		patients' dental needs		
	Long term relationship	You pay more attention to oral health after you were treated by dental student	Patient report	PFPCC
6.Empathy	Dignity/ respect / Courtesy/ compassion	How often did your dental plan's customer service staff treat you with courtesy and respect	Patient report	AHRQ/ CAHPS dental plan survey
		Being sensitive, understanding, and patient with you, never rough, unsympathetic, or impatient	Patient report	PAQ
	Emotional support/ rapport/ anxiety concern	Forewarning you of any likely pain involved and offering ways of reducing pain	Patient report	PAQ
		Develops rapport with patient	Dental team	SCAI
		I do not enjoy reading non-medical literature or art.	Self-report	JSPE
		Patients' illnesses can be cured only by targeted treatment; therefore, health care providers' emotional ties with their patients do not have a significant influence in treatment outcomes.	Self-report	JSPE

Domain	Concept	Measure	Self/patient report	Source/ tool
		Health care providers should not allow themselves to be influenced by strong personal bonds between their patients and their family members.	Self-report	JSPE
		Asking patients about what is happening in their personal lives is not helpful in understanding their physical complaints.	Self-report	JSPE
		Attention to patients' emotions is not important in patient interview.	Self-report	JSPE
		It is difficult for a health care provider to view things from patients' perspectives.	Self-report	JSPE
7.Continuing of care		Services ensure continuity of care	System assessment	PCI
8.Comprehensive care		Personalized services are aimed at attaining high quality and excellence	System assessment	PCI
		The community participates in the planning of health services	System assessment	PCI
9.Coordinated care		Collaboration across disciplines and programs is promoted at all levels of service organization	System assessment	PCI
		Health services are integrated and coordinated around patients' needs	System assessment	PCI

PAQ as Patient Questionnaire (176)

AHRQ/ CAHPS dental plan survey as Consumer Assessment of Healthcare provider system(165)

DTS as Dental trust scale(173)

PFPCC as Patient feedback on patient-centered care(168)

PCAI as Patient communication assessment instrument(175)

JSPE as Jefferson scale of physician empathy(169, 170)

3. Primary dental health care in Thailand

In an era when dentists were not taught in schools or universities in Thailand, before 1940. Those wishing to become a dentist must attend a practice class or work with people already doing this profession for many years; when they are sure they can open an independent office, they break out. Because, in those days, there was no control over qualifications and abilities. There was a lot of practice and knowledge transfer to become a dentist in this way. Because Thailand did not yet have a school that offered dentistry courses, and a small percentage of dentists who had been educated abroad, such as in the United States, Germany, Japan, the Philippines, etc., work in hospitals and open some of their own offices. In addition, another group of Chinese dentists opened their own dentist office in Bangkok, and the area with the most Chinese dentists is Charoen Krung Road(178).

In 1918 the Royal Thai Army officer received a dental training course and the knowledge received to teach and train nurses to help care for Chulalongkorn Hospital's patients. Later in the year 1929, the Royal Thai Army Dental School was established. Up in the army medical school to produce dental personnel for the military but can produce only about ten people. The public health dental services were in the school sanitation department under the Ministry of Education, which was responsible for providing dental services to students until 1923, it began to provide services to the public(179).

After the establishment of the Faculty of Dentistry in Chulalongkorn University in 1940(180), the Ministry of Public Health was concerned with the health of the people's oral cavity as well, then in 1944, established a dental school under the Ministry of Public Health called "Dental School Second Class" with the aim of training Thai people to be a dental provider in 2 year-course. Then in 1947, has transferred the business to the Faculty of Dentistry, Chulalongkorn University, as the Department of Tantanamai School. Produce diploma Tantanamai has the same course of study and professional scope as a 2nd class dentist. Later, due to the problem of dental health and access to services, the Ministry of Public Health, with assistance from the World Health Organization, established a dental nurse school in 1968 to produce dental personnel to work in community hospitals and health centers.

The National Dental Health Program was first included in the National Economic and Social Development Plan 1977-1981 or in the 4th Plan. Provide dental services to students and government officials of the Ministry of Public Health. Training Assistant Health Officers Providing preventive dental services to primary school students in Bangkok with supervision of tooth brushing after lunch and providing fluoride solution every two weeks and providing dental health education services to students. The performance of the National Dental Health Program under the 4th of the National Economic and Social Development Plan was found to be unsuccessful, in part due to the shortage and concentration of dentists in urban areas(181).

Later in the late 1980s', the government contracted dentists distributed to rural areas by stationing them in hospitals and working at the provincial health office. Appoint a provincial dental public health committee, with the director of Provincial Public Health as the chairperson of various departments as members and the public dental department of the community hospital as members. This makes the work of dental public health services from promotion, prevention, and treatment to be systematic. Since the fourth edition of the Development Plan, the Department of Health's dental public health work has been developed sequentially. To focus on solving dental health problems of people of all age groups(182).

Despite greater access to oral health services from the contracted dentist policy, in 2001, the health care system was reformed towards a universal health coverage scheme; many problems remain to be addressed (183). Policy to emphasize prevention was still far from expectation. Most of the increased service usage was curative dental care. It was also found that there was a problem with long queues, especially dentures and specialized treatments such as root canal treatment. The need for intimate care is increasingly common because more complex patients with more chronic systemic diseases have longer life. Dental health conditions for young children, school-age children, adolescents, working-age, and the elderly were still found to be a serious problem (184). As the demand for oral healthcare services is still this large and complex,

it is also found that the problem of inaccessibility of services and distribution of dental workers remains, especially at the primary care level (185).

Like other countries, the health situation in Thailand is influenced by more economic, social, and cultural changes. Changing the population structure that makes Thailand an aging society affects the health situation of the people. The risk factors of both environmental and health behavior include inappropriate diet, physical inactivity, smoking, drinking, and insufficient rest. These factors put Thais at risk of chronic diseases such as diabetes, hypertension, obesity, stroke, as well as cancer. A similar situation happens over the world, thus the World Health Report in 2008, "Primary Health Care: Now More Than Ever (69), proposed four strategies for primary health care reform including as follows: 1. Reforms aimed at achieving health equity, social justice, and eliminating exclusion in healthcare systems, primarily through the implementation of universal access and social health protection - universal coverage reforms.

2. Reforms focused on reorganizing healthcare services around the needs and expectations of individuals, prioritizing primary care, and ensuring their social relevance and responsiveness to the changing world, ultimately leading to improved outcomes - service delivery reforms.

3. Reforms aimed at creating healthier communities by integrating public health interventions with primary care and promoting the adoption of healthy public policies across various sectors - public policy reforms.

4. Reforms that seek to move away from excessive reliance on command and control approaches as well as complete disengagement of the state and instead foster inclusive, participatory, and negotiation-based leadership to address the complexities of modern healthcare systems - leadership reforms.

From Thai health situation and global acknowledgment from the World Health Report in 2008 that focused on primary health care. In 2014, Thailand launched the "Family Care Team" (FCT) policy which was responsible for all households. This includes the emergence of multidisciplinary teams, which include dental professionals and other proactive service sectors in the community.

In 2017 and 2019, the new constitution of the Kingdom of Thailand B.E.2560 and the primary health care act mentioned that family physicians should work with a group of allied health professionals with patient-centered care in the primary care setting (57, 58). This shows that Thailand is strongly committed to primary health care reform with the aim of providing people with access to care, good quality services, and reduced costs. Dentists, therefore, need to adjust to the direction of the primary health system by

developing their potential to be able to work with health teams at the local level in order to further address oral health problems and the overall health of all population groups.

4. Factor analysis

Factor analysis is a widely utilized statistical method in the fields of psychology and education(186) and is recognized as the preferred approach for interpreting self-report questionnaires (187). It serves various purposes in research. Firstly, factor analysis allows for the reduction of a large number of variables into a smaller set of variables known as factors. Secondly, it helps establish underlying dimensions among the measured variables and latent constructs, contributing to the development and refinement of theoretical frameworks. Thirdly, it provides evidence of construct validity for self-report scales.

There are two main types of factor analysis: Exploratory Factor Analysis (EFA) and Confirmatory Factor Analysis (CFA). Exploratory Factor Analysis (EFA) is a comprehensive and multivariate statistical procedure commonly employed in psychology, education, and, more recently, in health-related fields. EFA involves exploring the relationships between variables without preconceived knowledge of their associations. The objectives of EFA include reducing the number of variables, examining the structure and relationships among variables, assessing the unidimensionality of theoretical constructs, evaluating the construct validity of scales, tests, or instruments, as

well as facilitating the development and testing of proposed theories. Steps in Exploratory Factor Analysis(188):

1. Data cleaning
2. Deciding on extraction method to use
3. Deciding how many factors to retain
4. Deciding on a method of rotation (if desired)
5. Interpretation of results (return to #3 if solution is not ideal)
6. Replication or evaluation of robustness (return to beginning if solution is not replicable or robust)

Confirmatory factor analysis (CFA) is widely used in the field of psychological assessment to provide empirical evidence supporting construct validation. (190). Whether the factor structure of a noncognitive instrument is derived from psychological theory or empirical research, it is crucial to conduct confirmatory factor analysis (CFA) as part of the process. CFA is a specific type of structural equation modeling (SEM) that examines causal relationships among latent variables. Its main purpose is to assess whether the hypothesized structure aligns well with the observed data, indicating the presence of relationships between the observed variables and their underlying latent constructs (Child, 1990, as cited in Holtzman, 2011). Additionally, CFA ensures that all items are appropriately associated with the relevant facets within the broader construct being measured.

Performing a CFA involves several steps. The first step is to define the model being validated. Data collection is then carried out to test the model. If the model was initially proposed using exploratory factor analysis (EFA), it is recommended to either use an entirely separate dataset for the CFA or randomly split the initial dataset into different subsamples for each procedure (EFA and CFA, respectively) (189).

After conducting an exploratory factor analysis (EFA), it is important to validate the obtained results by performing a confirmatory factor analysis (CFA). CFA is a technique used to determine if the number of factors or constructs and the loadings of observed variables on these factors align with the expected theoretical framework (Malhotra, Hall, Shaw, & Oppenheim, 2007, as cited in Costa). In order to achieve confirmation and accurately assess how the observed variables represent the underlying constructs, it is necessary to evaluate the reliability and validity of the scale (Joseph F. Hair, Black, Babin, Anderson, & Tatham, 2009, as cited in Costa). The most commonly employed method for this purpose is Cronbach's Alpha, which measures reliability and internal consistency (190)

There are 5 steps in confirmatory factor analysis

1) Model specification: The measurement model focuses on understanding the relationships between constructs, indicators, and the intended constructs they represent (i.e., factors). Through the examination of three essential sets of outcomes - parameter estimates, fit indices, and possibly modification indices -

researchers systematically test measurement hypotheses and make necessary adjustments to align the hypotheses with the actual structure of participants' scale responses. Therefore, it is of utmost importance to begin by defining the measurement model accurately(190).

2) Model identification: Parameter estimation is possible only if the model generated can identify the possibilities. The specified model must have number of parameters that must be estimated less than Number of members in the variance-covariance matrix of observable variables, or can be calculated from the formula $t \leq (p)(p+1)/2$ where t is the number of unknown parameters, p is a number observable variables of the model.

3) Parameter estimation: In estimation, parameter values are iteration by estimating the population covariance matrix ($\sum$) to be inaccurate. It is the lowest when compared with the sample covariance matrix (S), which is obtained from empirical data from the sample. There are several estimation methods used for parameter estimation in the CFA such as Maximum likelihood (ML), Generalized least square (GLS), Weighted least square (WLS), which are appropriate for different data such as ML and GLS have similar characteristics. It is suitable for data with multi normal distribution and large sample size, whereas WLS method requires large sample size that is not enumerated as multi normal (Schumacher & Lomax, 2010 cited in Costa(190)).

4) Evaluating the Data-Model Fit: The first step is to assess the conformity of the model. The researcher must verify that the parameters. Is the estimate reasonable or not? Is it according to the expected theory or not? But if the following cases are found, the specification of the component model is incorrect. In the past, the obtained value of chi-square must not be statistically significant, meaning that the developed model had no difference with the statistically significant empirical data, however, the calculated chi-square values were affected from the large sample size or information that deviating from the initial assumptions, other statistical values should be considered as well. Other fit indices are numerous. The popular conformity indices include the Goodness of Fit Index (GFI), Comparative Fit Index (CFI), Adjusted. goodness of fit index (AGFI), Standardized root mean square residual (SRMR), and Root mean square error of approximation (RMSEA). (Schumacher & Lomax, 2010 cited in Costa(190)).suggest that GFI, AGFI and CFI greater than .90-.95 are the measurement theory model created, if the standardized RMR is less than 0.05, the model is consistent with the data, while the RMSEA is lower than 0.05-0.08 indicates that the model is consistent with the empirical data.

5) Model modification: where the model conformance statistic indicates that the component model does not conform to the data. It may be possible that the definitions of relationships (paths) in the model do not match. In reality

condition, for example, a senior has a hypothesis, some questions have one component weight, but the questions that clause should precede more than one constituent or, according to the theory, the constituents are relative but, they are not correlated, the reviewer can then adjust the parameters in the hypothetical model. The modification indices (MI) from the software will suggest which parameters should be added to the model to make the model consistent with the data. In order to decide which parameter to be adjusted, the judge must carefully adjust the parameter(73).

5. Multigroup Analysis and measurement invariance

The multi-group analysis is an analysis of the structural equation model for multiple population groups or samples such as gender variables, educational levels, schools, organizations etc., or population groups with different cultures(73). Therefore, they can be applied to research of all types of clustering characteristics. The sample units must be a member of only one group cannot join other groups (Mutually Exclusive). Multiple group analysis main purpose is to verify that structural equation model, which is a conceptual framework that researchers built from theory. Is it consistent with the empirical data? If there is a harmonious the validated model can then be used to describe the relationship between the variables. The key to multigroup analysis is the ability to analyze data collected from all sample groups with mandatory conditions (constraints)

provides a structural equation model. The conceptual framework for research has the same characteristics. Before using the model to check for harmony and fit with the empirical data. If the results of the analysis found that chi-square value in the harmony and fit test is negative or is not statistically significantly lower than the critical value means that the model is built according to the theory is consistent with the empirical data of all groups then models are same with theoretical model, called the model invariance.

Testing Measurement Invariance

Measurement invariance can be examined within the context of item-response theory (IRT) or structural equation modeling (SEM). However, the SEM framework, utilizing confirmatory factor analysis (CFA), is more frequently employed compared to IRT. A measure from one measure is invariant only if the subject has the same measurable property; even if from different populations, the measurable score should be obtained. But when they came from different populations, they got different scores, indicating that the measurements were variable (71) Schmitt and Kuljan (191)categorize invariance test according to the nature of the hypothesis test to analyze the structural equation model in 7 types which five of them relevant to measure invariance including:

1. Variance-covariance matrix: This test aims to examine the hypothesis and determine whether measurements vary between populations. If the hypothesis is not rejected, it is concluded that there is no significant variation in measurements across populations.

2. Configural invariance (COI), also known as weak invariance: This is the initial and least strict step in the measurement invariance ladder. It tests whether the constructs have the same pattern of free and fixed loadings across different groups.

3. Metric invariance (MEI), also known as strong invariance: If configural invariance is supported, the next step is to test for metric invariance. This step assesses the equivalence of item loadings on the factors. Metric invariance ensures that each item contributes to the latent construct to a similar extent across different groups.

4. Scalar invariance (SCI): If full or partial metric invariance is established, the subsequent step is to test for scalar invariance. Scalar invariance examines the equivalence of item intercepts for metric invariant items. It ensures that mean differences in the latent construct capture all the mean differences in the shared variance of the items.

5. Uniqueness invariance or equal residual (ER), also known as strict invariance: After scalar invariance, the final step in establishing measurement invariance is to test for uniqueness invariance. This step examines the equivalence of item residuals for metric and scalar invariant items. It ensures that the sum of specific variance and error variance is similar across different groups, indicating that the measurement error and specific variance are comparable.

Note: It should be noted that in the residual invariance model, items with unequal loadings and/or intercepts should be allowed to vary across groups while constraining the residuals. The process of multigroup analysis has three steps.

1. Multiple group analysis without constraint conditions step was to analyze the data of several samples. Using the software to estimate the parameters in each population model separately and to test whether is the model in each consistent with the empirical data? This was based on the Goodness of fit index (GFI) of all test populations. If at least one population is inconsistent with the empirical data. If so, the model needs to be adjusted according to the empirical data reported by the program in the Modified Index section. (Modification indices) adjusted according to the researchers' observations on a theoretical basis until a model is consistent with the empirical data is obtained then take the next step.
2. Multiple group analysis with constraint conditions is the analysis of several samples with mandatory conditions to test model invariance between individual population groups. This must be analyzed several times according to the number of assumptions that the researcher has. The researcher must interpret that how does the model vary between population groups? In each test.
3. Summary analysis step calculates the difference of the fit Index obtained from the hypothesis test in Step 2 between the low and high pairs take the difference of the fit indices to interpret to summarize the results of the analysis of the total group model. If the aim of the research aims to answer the research problem that is there a variation in the model between population groups? What does the immutable model

look like? Which parameters vary and which parameters do not vary between populations.

In a study conducted by Aungsumalee Pholpark et al. in 2012 (192), the researchers examined the responsiveness of the Thai healthcare service system across different types of national health insurance schemes and healthcare facilities in 9 provinces. The study aimed to assess how different health insurance schemes and hospital types influenced the responsiveness of the system. The findings of the study indicated significant differences in median responsiveness scores among the three health insurance schemes based on hospital types. Specifically, the Civil Servants Medical Benefits Scheme (CSMBS) showed higher responsiveness scores compared to the Social Security Scheme (SSS) and Universal Coverage Scheme (UCS). Moreover, the type of hospital was found to be significantly associated with responsiveness across all components. Overall, private hospitals scored significantly higher than other types of hospitals, while university hospitals had significantly lower scores compared to other hospitals, except in the domain of choice, where university hospitals had significantly higher scores than regional/general hospitals.

In 2012, Tippawan Liabsuetrakul et al. (193) conducted a study to evaluate the perception of women who had given birth in a hospital regarding health system responsiveness and satisfaction. The researchers aimed to assess the impact of the type of hospital on these factors. The findings of the study revealed that the type of hospital played a significant role in all

components of health system responsiveness. Specifically, compared to women covered by universal healthcare, women insured through the social security and civil servant medical benefit schemes rated the aspects of dignity, confidentiality, and choice of provider higher. Furthermore, the satisfaction of women with the delivery of care was significantly associated with higher ratings in all components of health system responsiveness, except for the choice of health providers.

In 2021, Adepeju Lateef et al. (194) conducted a study focusing on the challenges faced by nurses in implementing patient-centered care in rural primary healthcare centers in Nigeria. The findings of the study highlighted the various obstacles encountered by nurses in their efforts to provide patient-centered care. The study revealed that nurses faced a range of challenges when it came to implementing patient-centered care. In order to enhance the quality of healthcare delivery in primary healthcare facilities, it is crucial to strengthen management support, provide adequate education and training, and foster internal motivation among nurses. These measures are essential for achieving transformative healthcare outcomes and improving the overall quality of care in rural primary healthcare settings in Nigeria.

In 2017, Bashayer Al-Sahl et al. (195) conducted a study at a tertiary hospital in Saudi Arabia. The findings of the study indicated noteworthy correlations between patient characteristics and their perspectives on person-centered care. Several factors, including age (P=0.005), gender (P<0.001), nationality (P=0.026), area of residency (P=0.001), route to

admission (P=0.002), length of stay (P=0.003), and hospital preference (P=0.010), were found to be significantly associated with patients' views on person-centered care.

In their study, Irene Røen et al. (196) in Norwegian nursing homes and its relationship with organizational factors and staff characteristics. The findings revealed that higher levels of PCC were linked to various factors, including greater job satisfaction, three years or more of health-related education, lower levels of quantitative demands and role conflict, higher levels of perception of mastery, empowering leadership, innovative climate, perception of group work, as well as the type of unit and the physical environment in the nursing home unit.

In their research, Tassanun Thaiautvitee and Apinya Jumpamool(197) examined the factors that influence the perception of patient-centered care among registered nurses at Srinagarind Hospital, Khonkaen University. The study found that personal and environmental factors, including perceived professional value, communication, teamwork, and operational support, significantly predicted patient-centered care among staff nurses at a significance level of $p \leq 0.05$.

In their study, Annica Backman et al. (198) investigated the characteristics of nursing home units in Sweden that exhibited high versus low levels of person-centered care. The research examined the factors related to leadership, staff-resident relationships, and facility characteristics. Highly person-centered units were identified by the active involvement of leaders in promoting staff knowledge, supporting professional development, fostering teamwork, and ensuring high-quality care. Additionally, staff in these units received supervision from nurses to a greater extent.

Highly person-centered units were also characterized by their focus on dementia care, smaller bed capacities, and a higher proportion of enrolled nurses.

Chapter III

Methodology

This study employed a mixed-methods design, combining qualitative and quantitative approaches. The scale development process for assessing patient-centered dental care in primary health care settings in Thailand consisted of two phases and a total of nine steps.

In the first phase, dimensions and items were generated, and a panel of experts evaluated the content validity of these dimensions and items. The participants in this phase included experts from relevant fields and patients in primary health care who were purposefully selected. The patient-centered scales were then constructed based on the outcomes of this phase. The steps involved in scale construction included pre-testing the questions, assessing reliability, administering the survey, reducing the number of items, and determining the scale's factor structure.

In the second phase, scale evaluation was conducted, which involved testing the number of dimensions, assessing validity, examining invariance across different groups, and evaluating the impact of personal attributes. This study resulted in developing two scales: the first focused on dentists' self-assessment in primary care. In contrast, the second scale measured patient perception of patient-centered care as experienced by the patients themselves.

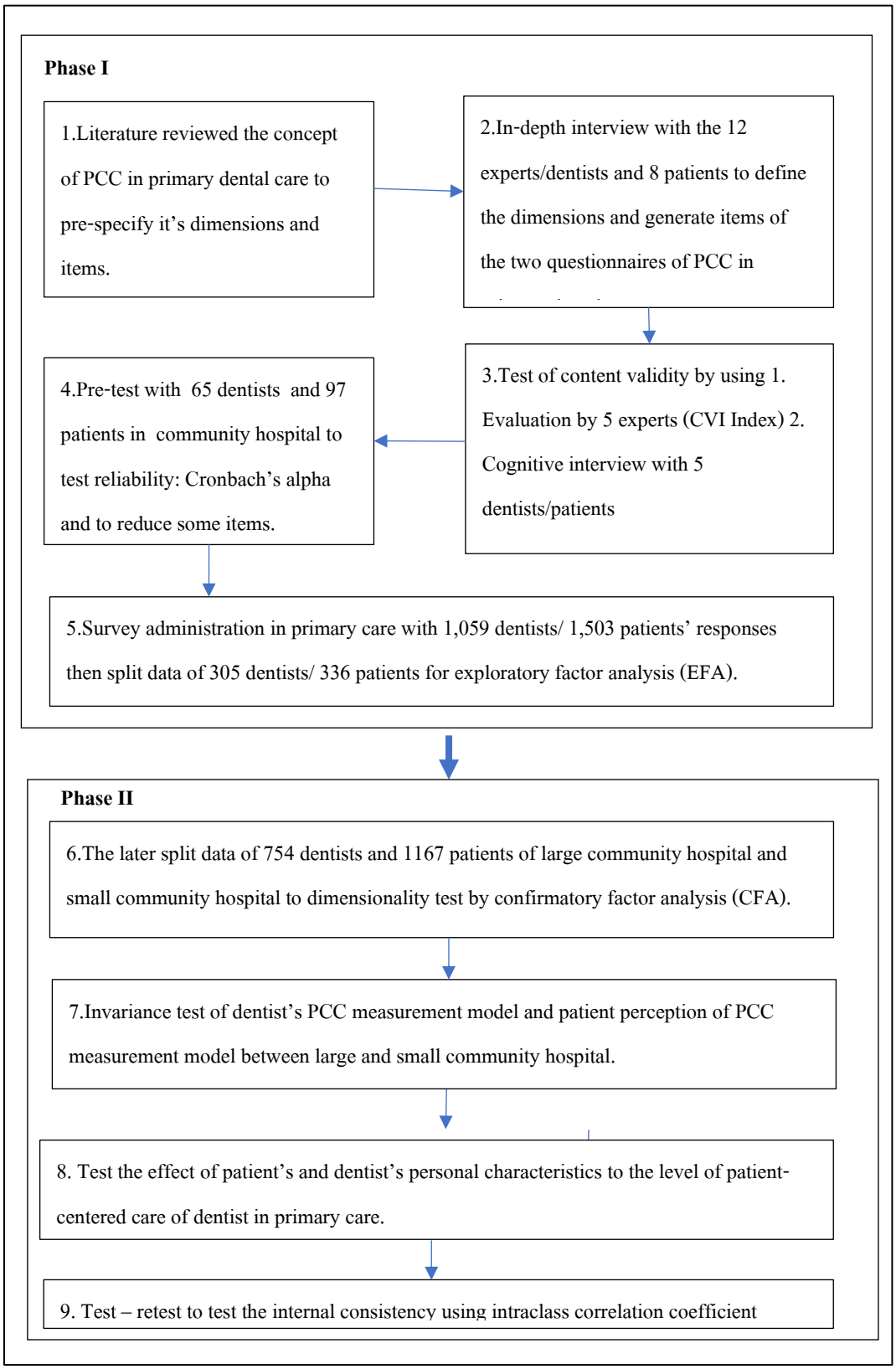

Figure 12 Research flowchart

Population

The population of the patient-centered care of dentist scale study was 3,961 dentists in community hospitals in Thailand. The large and small community hospital was categorized using the hospital level in the Ministry of Public Health as a criterion. There are seven levels of hospitals in the Ministry of Public Health, Thailand: A, S, M1, M2, F1, F2, and F3. In this study, the researcher classified the large community hospital as M2 or F1, which means it has 30-60 in-patient beds. The small community hospital was F2 or F3, meaning it has fewer than 30 in-patient beds. The latest data show 1,476 dentists in all large community hospitals and 2,485 dentists in all small community hospitals. There are 1,476 dentists in large community hospitals and 2,385 dentists in small community hospitals.

The population of patient perception of patient-centered care of dentist scale was dental patients in community hospitals during the data collection period of each hospital.

Sample and sample size

Inclusion criteria

The dentist sample were:

1. Dentist who was work in community hospital under Ministry of Public Health, Thailand.
2. Consent to be a sample in this study.

The patient sample were:

1. Patient or parent/carer in the waiting area of dental department of community hospital who just finished dental treatment or whoever use dental care at least one time in this hospital within 12 months.
2. Age between 18- 70 years, can read and understand Thai fluently.
3. Consent to be a sample in this study.

Exclusion criteria

1. The dentist or patient/parent/carer who do not consent to the research.
2. The dentist or patient/parent/carer who have some medical conditions or may not be convenient to do the questionnaire.

Good sample size for EFA was recommended by Costello and Osborne, 2005 (199) was at least 300 samples and a minimum of 200 samples were required for the CFA. The sample size for the invariance test was calculated online at Computing Power and Minimum Sample Size for RMSEA website (http://www.quantpsy.org) (200) with alpha =0.05, power = 0.95, degree of freedom = 24, a null hypothesis with RMSEA = 0.06 and alternative hypothesis RMSEA = 0.02, the sample size was 482, and researcher adds 10% of incomplete data, then the sample size was at least 532 dentists and patients for each group of small and large community hospital then total samples were 1,064 each group. The calculated samples of 1,364 were needed at least for each dentist, and the patient sample was for Phases 1 and 2.

Sampling methods

We employed a multi-stage random sampling design for our study. Thailand comprises four geographic regions and 75 provinces (excluding Bangkok and Samutsakon due to the absence of community hospitals). These regions are the North with 18 provinces, Central with 23 provinces, Northeastern with 20 provinces, and South with 14 provinces. The sampling process began with simple random sampling of provinces from each of the four regions. We then purposively selected both large and small hospitals within each province. Convenience sampling was used to recruit patients and dentists for participation in the study. A detailed description of the planned sampling methods is provided in Figure 13

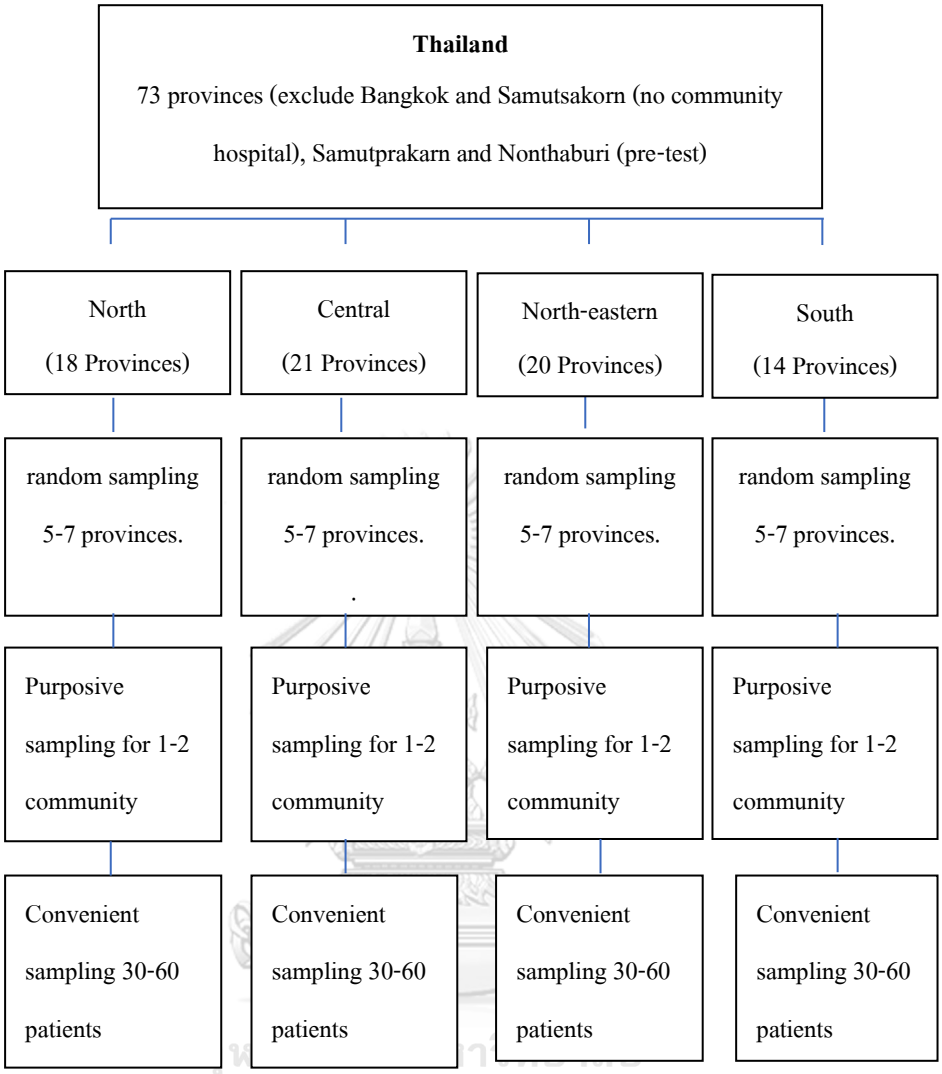

Figure 13 Sampling for patient participation

Questionnaire distribution commenced in July 2022 and continued until early September 2022. However, the number of responses did not reach the desired target. As a result, we made a redesign. When evaluating the scale, we implemented a single survey, randomly assigning participants to either the Exploratory Factor Analysis (EFA) or Confirmatory Factor Analysis (CFA) group(201). The detail of the sampling methods is described below.

1. Patients – The simple random selection for 5-7 provinces from each of the four regions of Thailand followed by purposive sampling for 1-2 small/large community hospitals of each province were conducted. Convenient sampling was applied to get 30-60 patients from each hospital. The 1,527 patients responded to the questionnaire from July to October 2022. They are from 32 hospitals in 26 provinces shown in Appendix D.

2. Dentists – The convenient sampling was applied using google Forms online. The 1,059 dentists responded to the questionnaire from July to November 2022. They work in 295 community hospitals spread over 74 provinces of Thailand shown in Appendix D.

PHASE I

The objectives of this phase were to develop a conceptual construct of patient-centered dental care for dentists in primary care in Thailand and to create two questionnaires for dentists and patients. We tested of reliability of the two questionnaires for dentists and patients. We extracted the optimal number of patient-centered care in primary dental care factors that fit a set of questionnaire items using exploratory factor analysis (EFA).

1. Sample and sampling methods

There are two types of participants in Phase 1: qualitative and quantitative.

The quantitative sample and sampling have been described on pages 145-147. This topic will explain only the qualitative part.

In-depth interview - In total, 20 participants in 3 groups were recruited by purposive sampling and the snowball strategy, including five experts in patient-centered care, seven dental practitioners, and eight dental patients at community hospitals and primary care units. The group of experts consisted of a family physician who had worked in a community hospital for over ten years and four dentists from various organizations, including three lecturers in a different Faculty of Dentistry in Thailand who taught topics related to patient-centered care or holistic care. The last expert was a member of the Dental Council of Thailand, whose work is related to patient-centered care. The dental practitioner group consisted of six dentists who practiced regularly at community hospitals and occasionally at sub-district health promotion hospitals (Primary care units) for at least ten years continuously, distributed in four regions of Thailand, and a dental

nurse who worked for more than 10 years at a community hospital in Buriram Province, located in northeastern Thailand. The last group comprised seven patients and one parent of a 5-year-old patient at four community hospitals in the provinces of Trang, Roi-et, Chiang Rai, and Samut Prakan, representing four regions of Thailand. To be included in the study, they had to have received dental treatment more than two times within the last 12 months.

Table 6 Characteristics of participants in in-depth interviews.

Participant	Characteristics	N
Dental practitioners	**Age (yrs.)** Mean =46.1 (3.72), Min 40 /Max 50	
(n=7 comprising 6 dentists and	31-40	1
1 dental nurse)	41-50	6
	Gender	
	Male	3
	Female	4
	Specialty	
	Dental public health	1
	Pedodontics	1
	GP	5
Experts	**Age (yrs.)** Mean =48.0 (6.63), Min 43 /Max 57	
(n=5 comprising 4 dentists and	41-50	3
1 physician)	51-60	2
	Gender	
	Male	2
	Female	3
	Specialty	
	Dental public health	1
	Pedodontics	1
	Advanced GP	2
	Family medicine	1
Patients	**Age (yrs.)** Mean =49.9 (19.47), Min 23 /Max 75	
(n=8)	21-30	1
	31-40	1
	41-50	3

Participant	Characteristics	N
	61-70	1
	71-80	2
	Gender	
	Male	4
	Female	4
	Security insurance type	
	Universal coverage scheme: UCS	2
	Social security scheme: SSS	2
	Civil Servant Medical Benefits Scheme: CSMBS	4

1. Instruments

There are 2 types of instruments in phase 1.

1.1. The instruments in qualitative study

Two semi-structured interview guidelines were constructed, with content verified by the main advisor and co-author. The first guideline consisted of six open-ended questions to explore participants' experiences and expectations of dental care and discussions with the clinicians while receiving dental consultations or treatment. The second guideline consisted of nine open-ended questions to investigate how to practice with a patient-centered approach by the dentist and the expert, how they interacted with different patients, and how they understood the patient-centered care concept in primary care. These are the detail of the semi-structure interview guidelines.

1.1.1. The semi-structure interview guideline for patient. (Appendix A-1)

1.1.1.1. Tell us about your experience of caring for your dentist and dental personnel. What is impressive and good, and who always wants to receive this kind of service?

1.1.1.2. Tell the experience of taking care of the dentist and the dental personnel team, what needs to be improved, and what needs to be corrected.

1.1.1.3. In your opinion, what is patient-centered care in dental services?

1.1.1.4. Do you think that patient-centered care is necessary for dental services? Why? Why not?

1.1.1.5. If patient-centered care is to be measured. What do you think is the indicator? Please give an example of a measurement question or a proper measurement method.

1.1.2. How to encourage dentists to take care of you in a patient-centered manner? The semi-structure interview guideline for expert. (Appendix A-2)

1.1.2.1. What is Primary Dentistry?

1.1.2.2. What is patient-centered care in dental services?

1.1.2.3. Do you think that patient-centered care is necessary for primary care dentistry?

1.1.2.4. Are patient-centered care and person-centered care similar or different? How?

1.1.2.5. What are the components of patient-centered care?

1.1.2.6. How do you provide patient-centered care?

1.1.2.7. If you are going to measure patient-centered care, what do you think is the indicator? Please give an example of a measurement question or a proper way to measure it.

1.1.2.8. What are the barriers and what is the promotion of patient-centered care?

1.2. The instrument in quantitative study: there were 4 steps to construct the instrument as preliminary instruments in this study.

1.2.1. Literature review- The literature review and assess existing instruments were to pre-specified domains of patient/person-centered dental care. Then, it described and provided a preliminary conceptual definition of the domains and pre-specified questions. A literature review from 2000-2020 found nine studies that proposed a model of patient/person-centered care in dentistry. The nine attributes and some items in the questionnaire of patient-centered dental care in primary health care were specified and described in Chapter II in Table 3 and Table 5.

1.2.2. In-depth interviews: The interviews with 20 participants were conducted. The twelve attributes were captured through the thematic analysis method. We defined the operational definition of the twelve attributes, which are demonstrated below.

1. Whole person/ holistic

The dentist should provide services to patients by considering their mental and physical health, preferences, interests, and values on care-related issues. Moreover, the dentist should acknowledge the patient's family context as well as the

influence of residential communities and personal backgrounds such as education, religion, ethnicity, occupation, and lifestyle, including society, culture, and environment that affect the lives of patients when gathering information to design care and treatment for patients.

2. Disease and illness

Dentists can assess the patient's thoughts and perceptions of good health, current health conditions, illness or disease progression, and past experiences with illness. Dentists can thoroughly explore the experience of illness, including perceptions of the disease, the patient's feelings about the illness, and the impact of disease and illness on the patient's life in terms of daily life, work, family, and society arising from the illness. Dentists can assess the patient's expectations about treatment and health outcomes.

3. Shared information and decision-making

When information has been gathered about the illness and the diagnosis of the disease, dentists, together with the patient/parent/family, must determine the importance of the problems, set the goal and treatment plan by providing complete and appropriate information on the treatment plan, treatment options, pros and cons, and cost of treatment. Dentists should empower and promote patients to share decision-making on treatment options and care during and after treatment. Dentists

should allow their patients to ask questions until they understand the plans and treatment options.

4. Dentist-patient relationship

A good relationship between the dentist and the patient benefits care and thus develops the potential for the patient's self-care. Dentists should respect equality, differences, honesty, patient rights, and confidentiality. The relationship between a dentist and a patient must be within a level or distance that is not too intrusive and is a relationship of mutual trust.

5. Dentist's self-awareness

Dentists must have the ability to manage their own emotions. They must not get too involved in a patient's negative or positive emotions and realize that everybody is a human being who can feel different emotions, be aware, and be able to manage personal feelings appropriately when faced with difficult situations for each patient.

6. Empathy

Dentists must understand the patient's feelings, acknowledging or sharing feelings about illness or oral health problems as the patient feels. The dentist can look at life or illness from the same perspective as the patient and care with compassion and sympathy.

7. Communication

Dentists must possess the ability to communicate with patients or relatives. The dentist should greet and introduce himself properly, talk in easy-to-understand language, listen deeply, give enough time to patients and relatives, and communicate appropriately, verbally and non-verbally, using media for explanations. The dentist must be able to appropriately verify and reflect the level of understanding from the consultation.

8. Pain and anxiety management

Dentists must prioritize the patient's comfort when providing services or performing procedures by considering their pain sensitivity and effectively addressing dental fear or anxiety. This entails being attentive to the patient's pain thresholds, employing appropriate pain management techniques, and employing strategies to alleviate dental-related fears and anxieties. The dentist's ability to skillfully manage these aspects is crucial in ensuring a positive and comfortable experience for the patient during dental procedures.

9. Accessibility

The dentist plays a key role in managing the efficiency and convenience of dental services, ensuring that they are delivered promptly and comprehensively based on each patient's specific needs. This includes prioritizing punctuality, facilitating the rescheduling of appointments when necessary, and ensuring easy access to the dentist when additional assistance is required. The dentist's

responsibility lies in effectively addressing these aspects to enhance the overall management of ease and convenience for patients seeking dental care.

10. Comprehensive care

Dentists' ability to provide services in various types of dental treatment in most conditions, at least primary procedures, refers to expertise. This includes oral health treatment, promotion, prevention, and rehabilitation to maintain good oral health. It covers most oral health problems, including teeth, gums, and oral tissue, as well as taking care of all ages of patients and being able to provide treatment for and reasonably linked to systemic diseases.

11. Coordinated care.

Dentists play a crucial role in managing coordination between patients, owner dentists, other dentists, or specialists within the same dental office or across different dental offices. This coordination extends to collaborating with dental assistants and staff within the dental department and coordinating with personnel across different departments within the same healthcare unit to prioritize the patient's health and well-being in a patient-centered manner.

12. Continuous care

The owner dentist follows up for treatment or procedures (Clinician continuity) that require ongoing care, such as periodontitis, follow-up after dentures, etc. This means periodic follow-up appointments to maintain oral health (periodic

recall) or synchronization of information and records of care when transferring patients between dentists or between services (record continuity)(202).

The initial items for the two questionnaires were developed using twelve operational definitions, and certain items were adapted from existing questionnaires (see Appendix B-1, B-2). Sixty-six items were included in the initial dentist scale, and 61 were included in the initial patient scale. An example question is provided in Table 7-8. The structure and details of the initial scales are presented in Table 9.

Table 7 Example questions in questionnaire for dentists.

Your behavior or perception or attitude while you practice to your patient.	**Frequency**				
	5	**4**	**3**	**2**	**1**
1. You serve all patients equally even though you know he/she is a difficult patient.					
2. You explain the advantages, disadvantages, costs, treatment options and possible outcome of treatments					

Table 8 Example questions in questionnaire for patients.

The behavior or effect of the dentist's behavior that you perceived.	**Frequency**				
	5	**4**	**3**	**2**	**1**
1. The dentist gave me enough time to explain my symptoms, dental and medical history.					
2. The dentist made me trust him/her.					

Table 9 Structure and specification of the initial items of PCCDS-P version and PCCDS-D version)

	Attributes	Measurement	PCCDS-P 61 items	PCCDS-D 66 items
1.	Whole person/holistic	Rating scale 1-5	6	6
2.	Disease and illness	Rating scale 1-5	6	5
2.	Shared information and decision-making	Rating scale 1-5	5	6
3.	Dentist-patient relationship	Rating scale 1-5	9	8
4.	Dentist's self-awareness	Rating scale 1-5	3	5
5.	Empathy	Rating scale 1-5	5	5
6.	Communication	Rating scale 1-5	8	9
7.	Pain and anxiety management	Rating scale 1-5	4	4
8.	Accessibility	Rating scale 1-5	4	5
9.	Comprehensive care	Rating scale 1-5	3	4
10.	Coordinated care	Rating scale 1-5	5	4
11.	Continuous care	Rating scale 1-5	3	5

1.2.3. Content validity test and cognitive interview: The two initial scales were sent to 5 experts to evaluate language accuracy and content validity according to the operational definitions using the content validity index (CVI). The experts included two dental public health experts, one lecturer in general dentistry in dental school, one dental lecturer who conducted patient-centered care research, and one family physician with 20 years of

experience in primary care. Each item on a scale can be evaluated by computing its Content Validity Index (CVI), referred to as I-CVI, and calculating an overall CVI for the entire scale, known as S-CVI. To determine the item-level CVI (I-CVI), experts were asked to rate each item's relevance using a 4-point scale. The I-CVI for each item was then calculated by dividing the number of experts rated as 3 or 4 by the total number of experts, representing the proportion of agreement on item relevance. The S-CVI was computed by calculating the I-CVI for each item and then determining the average I-CVI across all items. It is recommended that the S-CVI should exceed 0.80 to ensure satisfactory content validity(203) The S-CVI of the initial PCCDS-D version was 93.54 and 94.75 for the initial PCCDS-D version-P version, respectively. After the content validity test, the items for PCCDS-D version were reduced from 66 to 61 and from 61 to 59 for PCCDS-D version-P version. The researcher also conducted a cognitive interview with five dentists and 5 patients to check for language and understanding of questions. Participants in the cognitive interview were asked to complete a questionnaire and assess sentences and quotes to clarify their understanding and interpretation of the same meaning with their intended definition. The words in some questions were modified to be more clearly understood for the target sample. The I-CVI scores and corrections of the items of the two scales were demonstrated in Table 10 and Table 11.

Table 10 I-CVI score and correction of items of PCCDS-P version after content evaluation and cognitive interviews.

	Attributes	Number of items (before=61)	Number of items (after=59)	I-CVI (%)	Correction
1.	Whole person/holistic	6	6	60-100	Adjusted words and sentences, reduced 1 item and add 1.
2.	Disease and illness	6	6	80-100	Adjusted words and sentences
3.	Shared information and decision-making	5	5	100	Adjusted words and sentences
4.	Dentist-patient relationship	9	9	80-100	Adjusted words and sentences
5.	Dentist's self-awareness	3	3	80-100	Adjusted words and sentences
6.	Empathy	5	4	60-100	Adjusted words and sentences reduced 1 item (item id.32).
7.	Communication	8	8	60-100	Adjusted words and sentences
8.	Pain and anxiety management	4	4	80-100	Adjusted words and sentences
9.	Accessibility	4	4	80-100	Adjusted words and sentences
10.	Comprehensive care	5	4	80-100	Adjusted words and sentences, reduced 1 item (item id.51).
11.	Coordinated care	3	3	100	-
12.	Continuous care	3	3	100	Adjusted words and sentences

Table 11 I-CVI score and correction of items of PCCDS-D version after content evaluation and cognitive interviews.

	Attributes	Number of items (before=66)	Number of items (after=61)	I-CVI (%)	Correction
1.	Whole person/holistic	6	5	80-100	Adjusted words and sentences, reduced 1 item (item id.6).
2.	Disease and illness	5	5	100	-
3.	Shared information and decision-making	6	6	100	-
4.	Dentist-patient relationship	8	7	60-100	reduced 1 item (item id.21).
5.	Dentist's self-awareness	5	3	60-100	Adjusted words and sentences, reduced 2 items (item id.29,30).
6.	Empathy	5	4	60-100	Adjusted words and sentences, reduced 1 item (item id.35).
7.	Communication	9	9	80-100	Adjusted words and sentences
8.	Pain and anxiety management	4	4	100	Adjusted words and sentences
9.	Accessibility	5	5	100	-
10.	Comprehensive care	4	4	80-100	Adjusted words and sentences
11.	Coordinated care	4	4	80-100	Adjusted words and sentences
12.	Continuous care	5	5	80-100	Adjusted words and sentences

1.2.4. Pre-test: Pre-test: The initial 59-item PCCDS-P version was pretested by 97 patients in primary dental care in community hospitals, as well. The Cronbach's alpha of PCCDS-P version was 0.95. We deleted 14 items of PCCDS-P version that not relied because of the

Cronbach's alpha if these items deleted over 0.947 and Corrected Item-Total Correlation between .008 to .345 indicated low reliability and the less items, the higher response rate in patient sample. Thus, there were 45 items remained for PCCDS-P version. (As seen in Appendix C-1). The initial 61- item PCCDS-D version was pre-tested by 65 of primary care dentists in community hospital, the time used for answering the questionnaire varied, ranging from 10 to 20 minutes. The Cronbach's alpha of PCCDS-D version was 0.93, it was still 61 items because we considered of useful interpretation in final reports (Table 12-13). The preliminary 61-item PCCDS-D version show in Appendix C-2.

Table 12 Inter-Item Correlation Matrix, Corrected Item-Total Correlation and Cronbach's alpha if item deleted of 59-item PCCDS-P version.

Item ID										Corrected Item-Total Correlation	Cronbach's Alpha if Item Deleted
WP	1	2	3	4	5	6					
1	1.000									0.473	0.947
2	0.787	1.000								0.506	0.947
3	0.444	0.470	1.000							0.682	0.946
4	0.391	0.460	0.819	1.000						0.681	0.947
5	0.552	0.550	0.556	0.529	1.000					0.628	0.947
6	0.450	0.503	0.553	0.529	0.798	1.000				0.611	0.947
DI	7	8	9	10	11	12					
7	1.000									0.594	0.947
8	0.657	1.000								0.737	0.946
9	0.763	0.712	1.000							0.592	0.947
10	0.702	0.716	0.861	1.000						0.620	0.947
11	0.739	0.693	0.621	0.653	1.000					0.587	0.947
12	0.527	0.495	0.377	0.386	0.726	1.000				0.447	0.947
SD	13	14	15	16	17						
13	1.000									0.676	0.946
14	0.544	1.000								0.554	0.947
15	0.569	0.782	1.000							0.576	0.947
16	0.626	0.597	0.669	1.000						0.729	0.946
17	0.586	0.727	0.704	0.707	1.000					0.610	0.947
DP	18	19	20	21	22	23	24	25	26		
18	1.000									0.764	0.946
19	0.792	1.000								0.657	0.947
20*	-0.126	-0.115	1.000							0.021	0.950
21*	-0.130	-0.053	0.668	1.000						-0.008	0.951
22	0.703	0.611	-0.056	-0.179	1.000					0.751	0.946
23	0.715	0.717	-0.067	-0.100	0.825	1.000				0.735	0.946
24	0.687	0.694	0.000	-0.068	0.736	0.702	1.000			0.666	0.947
25	0.670	0.734	-0.081	-0.043	0.701	0.712	0.731	1.000		0.712	0.947
26	0.688	0.628	-0.113	-0.184	0.818	0.757	0.725	0.819	1.000	0.715	0.947

WP= Whole person, DI=Disease and illness, SD=Shared information and decision making, DP=Dentist- Patient relationship

*Dropped items

Table 12 Inter-Item Correlation Matrix, Corrected Item-Total Correlation and Cronbach's alpha if item deleted of 59-item PCCDS-P version. (continued)

Item Id.									Corrected Item-Total Correlation	Cronbach's Alpha if Item Deleted
SA	27	28	29							
27	1.000								0.606	0.947
28*	0.095	1.000							0.304	0.949
29*	0.252	0.865	1.000						0.326	0.949
Em	30	31	32	33	34					
30	1.000								0.444	0.947
31	0.755	1.000							0.526	0.947
32*	-0.201	-0.226	1.000						0.302	0.949
33	0.759	0.724	-0.164	1.000					0.564	0.947
34	0.607	0.684	-0.133	0.708	1.000				0.586	0.947
An	35	36	37	38						
35	1.000								0.629	0.947
36	0.512	1.000							0.478	0.947
37	0.560	0.592	1.000						0.551	0.947
38*	-0.085	-0.151	-0.199	1.000					0.200	0.949
CO	39	40	41	42	43	44	45	46		
39	1.000								0.604	0.947
40	0.551	1.000							0.661	0.947
41	0.572	0.578	1.000						0.486	0.947
42	0.461	0.522	0.342	1.000					0.504	0.947
43*	0.061	0.027	-0.072	-0.028	1.000				0.363	0.948
44*	-0.035	-0.070	-0.140	0.142	0.857	1.000			0.246	0.949
45	0.525	0.396	0.433	0.271	-0.274	-0.374	1.000		0.354	0.948
46	0.416	0.475	0.392	0.347	-0.078	-0.151	0.579	1.000	0.548	0.947
CP	47	48	49							
47	1.000								0.679	0.947
48	0.609	1.000							0.580	0.947
49	0.593	0.570	1.000						0.480	0.947

SA=Dentist's self-awareness, Em=Empathy, An=Anxiety management, CO=Communication, CP=Comprehensive care, *Dropped items

Table 12 Inter-Item Correlation Matrix, Corrected Item-Total Correlation and Cronbach's alpha if item deleted of 59-item PCCDS-P version. (continued)

Item Id.					Corrected Item-Total Correlation	Cronbach's Alpha if Item Deleted
CD	50	51	52			
50	1.000				0.683	0.947
51	0.639	1.000			0.602	0.947
52*	-0.094	-0.057	1.000		0.215	0.949
CN	53	54	55			
53	1.000				0.551	0.947
54	0.568	1.000			0.560	0.947
55	0.520	0.591	1.000		0.665	0.947
AC	56	57	58	59		
56	1.000				0.577	0.947
57*	0.141	1.000			0.294	0.949
58	0.543	-0.096	1.000		0.538	0.947
59*	0.114	0.799	-0.125	1.000	0.345	0.948
Total Cronbach's alpha of initial 59-item PCCDS-P version = 0.931						

CD=Coordinated care., CN= Continuous care, AC=Accessibility, *Dropped items

Table 13 Inter-Item Correlation Matrix, Corrected Item-Total Correlation and Cronbach's alpha if item deleted of 61-item PCCDS-D version.

Item ID									Corrected Item-Total Correlation	Cronbach's Alpha if Item Deleted
WP	1	2	3	4	5					
1	1.000								0.498	0.931
2	0.745	1.000							0.348	0.932
3	0.319	0.296	1.000						0.495	0.931
4	0.357	0.324	0.636	1.000					0.538	0.931
5	0.484	0.433	0.429	0.579	1.000				0.530	0.931
DI	6	7	8	9	10				0.617	0.930
6	1.000									
7	0.349	1.000							0.314	0.932
8	0.661	0.592	1.000						0.619	0.930
9	0.609	0.415	0.610	1.000					0.503	0.931
10	0.513	0.238	0.573	0.474	1.000				0.705	0.929
SD	11	12	13	14	15	16				
11	1.000								0.656	0.930
12	0.683	1.000							0.679	0.930
13	0.551	0.677	1.000						0.554	0.930
14	0.395	0.671	0.383	1.000					0.499	0.931
15	0.395	0.683	0.343	0.734	1.000				0.468	0.931
16	-0.239	-0.083	-0.190	-0.072	-0.041	1.000			-0.218	0.936
DP	17	18	19	20	21	22	23	24		
17	1.000								0.377	0.932
18	0.723	1.000							0.453	0.931
19	0.114	0.131	1.000						0.046	0.934
20	0.179	0.230	0.561	1.000					0.519	0.931
21	0.443	0.382	-0.028	0.003	1.000				0.257	0.932
22	0.207	0.211	0.186	0.252	0.067	1.000				
23	0.240	0.227	-0.215	-0.110	0.343	-0.098	1.000		0.650	0.930
24	0.153	0.203	-0.109	-0.132	0.438	0.011	0.720	1.000	0.779	0.929

WP= Whole person, DI=Disease and illness, SD=Shared information and decision making, DP=Dentist- Patient relationship

Table 13 Inter-Item Correlation Matrix, Corrected Item-Total Correlation and Cronbach's alpha if item deleted of 61-item PCCDS-D version. (continued)

Item ID										Corrected Item-Total Correlation	Cronbach's Alpha if Item Deleted
SA		25	26	27							
	25	1.000								0.308	0.932
	26	0.459	1.000							0.161	0.933
	27	0.410	0.604	1.000						0.175	0.933
EM		28	29	30	31						
	28	1.000								0.540	0.931
	29	0.585	1.000							0.498	0.931
	30	0.117	0.039	1.000						0.362	0.932
	31	0.402	0.468	0.132	1.000					0.422	0.931
AN		32	33	34	35						
	32	1.000								0.582	0.930
	33	0.201	1.000							0.239	0.932
	34	0.379	0.555	1.000						0.491	0.931
	35	0.141	0.249	0.173	1.000					0.214	0.932
CO		36	37	38	39	40	41	42	43	44		
	36	1.000									0.592	0.930
	37	0.436	1.000								0.665	0.930
	38	0.467	0.503	1.000							0.559	0.930
	39	0.324	0.534	0.485	1.000						0.516	0.931
	40	0.091	0.154	0.215	0.039	1.000					0.293	0.932
	41	0.378	0.406	0.336	0.170	0.179	1.000				0.484	0.931
	42	0.374	0.555	0.526	0.547	0.095	0.504	1.000			0.651	0.930
	43	0.477	0.617	0.562	0.447	0.078	0.485	0.566	1.000		0.592	0.930
	44	0.463	0.553	0.532	0.448	0.230	0.503	0.577	0.752	1.000	0.677	0.930

SA=Dentist's self-awareness, Em=Empathy, An=Anxiety management, CO=Communication

Table 13 Inter-Item Correlation Matrix, Corrected Item-Total Correlation and Cronbach's alpha if item deleted of 61-item PCCDS-D version. (continued)

Item ID						Corrected Item-Total Correlation	Cronbach's Alpha if Item Deleted
CP	44	45	46	47			
44	1.000					0.509	0.931
45	0.712	1.000				0.590	0.930
46	0.717	0.504	1.000			0.446	0.931
47	0.530	0.503	0.287	1.000		0.612	0.930
CD	48	49	50	51			
48	1.000					0.336	0.932
49	0.372	1.000				0.123	0.934
50	0.300	0.058	1.000			0.455	0.931
51	0.361	0.101	0.581	1.000		0.487	0.931
CN	52	53	54	55	56		
52	1.000					0.508	0.931
53	0.497	1.000	0.551			0.520	0.931
54	0.369	0.551	1.000			0.590	0.930
55	0.052	-0.072	-0.133	1.000		-0.029	0.934
56	0.353	0.388	0.451	-0.088	1.000	0.618	0.930
AC	57	58	59	60	61		
57	1.000					0.000	0.934
58	-0.353	1.000				0.091	0.933
59	-0.089	0.133	1.000			0.193	0.932
60	0.047	-0.009	0.146	1.000		0.207	0.932
61	-0.013	0.066	0.164	0.396	1.000	0.413	0.931
Total Cronbach's alpha of initial 59-item PCCDS-P version = 0.947							

CP=Comprehensive care, CD=Coordinated care., CN= Continuous care, AC=Accessibility

2. Data collection

2.1. In-depth interview

At the interview, the researcher started the conversation by introducing himself. Then explained the purposes of the interview and let them know they recorded throughout the conversation and then began with questions that built familiarity—then

asked questions according to the structure that had been prepared. The question was asked repeatedly to test the answer to get the most accurate information. Until they get ideas or information about patient-centered care in a primary care setting, as most people understand, or until it is certain that the data is saturated. In conclusion, the researcher used the triangulation method to verify and check the internal accuracy once again to get the most accurate and true information.

Due to the restrictions of the COVID-19 pandemic, the semi-structured interviews took 60-120 minutes. They were done via video calls with video recorded, phone calls with audio recorded, or face-to-face with audio recorded.

Survey administrations

2.1.1. Patients- The paper-based self-administered questionnaires were sent to the dental departments of 32 large and small community hospitals in 26 provinces across Thailand. Dental patients or their parents/caregivers who had received the dental treatment were informed and asked for consent to participate in the study from July to October 2022.

2.1.2. Dentists- The questionnaire was constructed in Google form, which set a limit of 1 response, and shared the link via Line application in all 75 provincial health office line groups for dentists in all community hospitals. The consent form was included on the greeting page of Google form before going to the questionnaire section. The

1,059 dentists responded to the questionnaire from July to November 2022. They worked in 295 community hospitals spread over 74 provinces of Thailand.

3. Data analysis

3.1. In-depth interview - The interview video and audio recordings were transcribed using Microsoft Word and voice typed in Google Docs, then reviewed and verified by the researchers. The data were analyzed according to the six processes of thematic analysis, familiarizing data, coding, searching for attributes, reviewing attributes, defining and naming themes, and reporting.(204). The QDA miner Lite software was used both inductively and deductively to align with the searched attributes from the literature reviews.

3.2. Exploratory factor analysis – All data analyses were conducted using IBM SPSS Statistics software version 24. The collected data were randomly assigned for exploratory factor analysis (EFA) and confirmatory factor analysis (CFA). These are the steps of EFA in this study.

3.2.1. The Kaiser-Meyer-Olkin (KMO) measure and Bartlett's test of sphericity reported to assess the sampling adequacy. A KMO value of 0.6 or higher indicates that the sample is adequate for EFA. The Bartlett's test of sphericity statistic significant was set at 0.05. (205)

3.2.2. An iterative Principal Axis extraction method was utilized because it can handle non-normality and effectively identify weak factors. To determine the suitable number of factors to retain, both parallel analysis and the visual scree test were

employed. Considering the characteristics of the constructs, a slight correlation between factors was assumed. As a result, a varimax rotation was applied to maximize the factor loadings of each item. The principal axis extraction method was employed because of its relative tolerance of non-normality and demonstrated ability to recover weak factors. Following the parallel analysis, the visual scree test was used to determine the appropriate number of factors to retain. Due to the nature of the constructs, it was assumed that factors would be slightly correlated. Therefore, a varimax rotation was employed to gain the most factor loading of each item.(205).

3.2.3. The items with factor loading greater than 0 .4 were retained on a single factor. Items with similar loadings on more than one factor were deleted (199).

3.2.4. Once the factors have been identified and rotated, we interpreted in terms of the variables that load on each factor. The factors have been given meaningful names that reflect the underlying construct they represent.

3.2.5. Internal consistency was evaluated for each item, factor and overall. If Cronbach 's alpha coefficient was over 0.7 indicated high reliability (206)

PHASE II

The objectives of this phase were to 1) construct and validate by CFA, 2) invariance test of the measurement models between large and small community hospitals and test the effect of

patient's and dentist's attributes on the level of patient-centered care. The test-retest reliability of the two newly constructed instruments was also conducted.

The sampling methods, instruments, and data collection in Phase 2 were administered as in Phase 1, as shown on pages 145-151. This section will explain data analysis only. All data analyses were conducted using IBM SPSS Statistics software version 24 and IBM SPSS Amos version 22. We started with randomly assigned exploratory factor analysis (EFA) and confirmatory factor analysis (CFA) by using the criteria of number of samples for EFA, which should be at least 300.(199)

1. Confirmatory factor analysis (CFA)

The confirmatory factor analysis was performed to test the measurement model sphericity and fit to the evidence data. Fit statistic criteria included Chi-square should low with p-value > 0.05, Chi-square/df < 2, comparative fit index (CFI; criterion > .95), Tucker-Lewis Index (TLI; criterion > .95), root mean square error of approximation (RMSEA; criterion < .06), (207) (208). Construct reliability (CR) was calculated with this formular if CR greater than 0.7 indicates good reliability(209). The average variance extracted (AVE) was calculated by the formular, if greater than 0.5 indicates good convergent validity(210).

$$CR = \frac{\left(\sum \lambda_i\right)^2}{\left(\sum \lambda_i\right)^2 + \left(\sum \epsilon_i\right)}$$

$$\mathrm{AVE} = \frac{\sum_{i=1}^{k} \lambda_i^2}{\sum_{i=1}^{k} \lambda_i^2 + \sum_{i=1}^{k} \mathrm{Var}(e_i)}$$

Measurement invariance test: a multigroup analysis

This study employed multigroup analysis to examine the measurement invariance between patients in large and small community hospitals. The key aspect of multigroup analysis is the ability to analyze data collected from different sample groups while imposing necessary conditions (constraints) on a structural equation model. The analysis assessed multilevel measurement invariance by comparing the baseline measurement model (configural invariance) with upper-level invariance tests, including metric invariance, scalar invariance, and error variance invariance. The difference between the chi-square statistics of the unconstrained and constrained parameter models was examined. If the difference was insignificant, it indicated that the model was invariant across groups.

To determine invariance, the difference in the chi-square statistic was compared with the critical value of the chi-square in the table for the same degree of freedom difference (df). If the difference was smaller than the critical value, the model was considered invariant between the groups. The Comparative Fit Index (CFI) was also used to assess model variation. A difference of -0.01 or less in CFI suggested that the model did not vary between groups. A difference between -0.01 and -0.02 may indicate potential variation, while a difference of -0.02 or greater indicates clear variation between groups. If the overall model fit was significantly worse, it indicated that invariance was not supported. (211, 212)

2. Test the effect of personal attributes of dentist or patient.

The IBM SPSS Statistics software version 24 and Jamovi software version 2.2.5 were used to perform multiple linear regression to determine the personal attributes of dentists or patients affected by patient-centered care level or patient perception of patient-centered care accordingly. The dependent variables were the patient-centered care level of the dentist or the patient's perception of patient-centered care. The independent variables or predictors were the personal attributes of the dentist and the personal attributes of the patient, which are detailed shown in Table 14.

Table 14 Dependent and independents variables in MRA

Dependent variables	Independent variables
Patient-centered care level of dentist	1. Gender: Male / Female 2. Working experience: Years 3. Dental Specialty: Yes / No 4. Hospital size: large/small 5. Number of cases per day 6. Rotation to primary care unit: Yes / No 7. Number of dentists in hospital
Patient perception of patient-centered care level of dentist	1. Gender: Male / Female 2. Age: Years 3. Highest education: Primary school, secondary school, bachelor and higher 4. Health insurance type: Universal coverage (UC), Social security scheme (SSS) and Civil servant medical benefit scheme (CSMBS) 5. Hospital size: large/small 6. Numbers of dental visit in last 24 months

Descriptive statistics were employed to ensure that the assumptions of the multiple regression analysis were met. Various procedures were conducted, including:

1) We examined scatter plots to assess the presence of a linear relationship between the predictor and dependent variables.

2) The variance inflation factor (VIF) values were computed to detect multicollinearity among the predictor variables.

3) The Durbin-Watson test was utilized to evaluate the presence of autocorrelation among the predictor variables.

4) The Harrison-McCabe and/or Goldfeld-Quandt was used to check for homoscedasticity.

5) The multivariate normality assumption was assessed using the Shapiro-Wilk test.

For the multiple regression analysis, the enter procedure was utilized to determine which variables in the model exhibited statistical significance. In this study, a significance level of 0.05 was set for all tests to establish statistical significance. The Durbin-Watson, Harrison-McCabe, Goldfeld-Quandt and Shapiro-Wilk test should not significantly at 0.05.

4. Test-retest reliability

We conducted the same test of the two newly developed questionnaires on the same group of 30 patients and 30 dentists one week apart. The intraclass correlation coefficients (ICC) were analyzed to evaluate the test-retest reliability. A higher correlation between the values of the two test occasions indicates greater stability or test-retest reliability. (213)

Chapter IV

Results

This study was a two-phase mixed method design that mainly aimed to develop reliable and valid scales to measure patient-centered dental care from both dentists' perspectives and patients' perceptions of dental care that they receive in primary care in Thailand. In this chapter, we will report in detail for these two phases as below:

1. Phase 1

   1.1 The conceptual construction of patient-centered dental care for primary care dentists in Thailand.

   1.2 Exploratory factor analysis (EFA)

   1.2.1 EFA of patient perception of patient-centered care of dentist scale (PCCDS-P version)

   1.2.2 EFA of patient-centered care of dentist scale (PCCDS-D version)

2. Phase 2

   2.1 Patient perception of patient-centered care of dentist scale (PCCDS-P version)

   2.1.1 Confirmatory factor analysis (CFA)

   2.1.2 Measurement invariance: A multigroup analysis

2.1.3 Reliability

2.1.3.1 Internal consistency

2.1.3.2 Test-rest reliability analysis

2.1.4 Test the effects of personal attributes of patient to the level of patient perception of patient-centered care of dentist: A multiple regression analysis.

2.2 Patient-centered care of dentist scale (PCCDS-D version)

2.2.1 Confirmatory factor analysis (CFA)

2.2.2 Measurement invariance: A multigroup analysis

2.2.3 Reliability

2.2.3.1 Internal consistency

2.2.3.2 Test-rest reliability analysis

2.2.4 Test the effects of personal attributes of dentist to the level of patient-centered care of dentist: A multiple regression analysis.

1. PHASE I

1.1. The conceptual construction of patient-centered dental care for primary care dentists in Thailand.

In the qualitative part of phase 1, twelve attributes were captured through literature reviews and thematic analysis of in-depth interview transcripts. Nine attributes were similar to the reviewed literature. The results also found three different attributes, including the dentist's self-awareness, pain, anxiety management, and accessibility. There were eight components that about 80–100% of participants mentioned, namely communication, disease-illness, whole person, shared information and decision-making, dentist-patient relationship, empathy, comprehensive care, and accessibility. The other four components are dentist's awareness, coordination care, continuous care, and pain and anxiety management; 40–70% of participants mentioned them. There were two concepts underpinning all attributes: the primary care concept and the patient-centered care in clinical encounters soft skill concept. Primary care involves delivering comprehensive and easily accessible healthcare services by healthcare providers responsible for addressing various personal healthcare needs. They establish enduring partnerships with patients and operate within the framework of family and community. Conversely, integrated care refers to providing comprehensive, well-coordinated, and continuous services that ensure a smooth and seamless healthcare journey for individuals(202). The four findings of accessibility, comprehensiveness, coordination, and continuity of care were related to the range of the definition of primary care, which were grouped into the patient-centered integrated care domain. The other 8 attributes were categorized into the patient-centered interpersonal care domain, as shown in Table 15.

Table 15 Patient-centered care of dentists in primary health care domains

Patient-centered interpersonal care	Patient-centered integrated care
1. Whole person	1. Accessible
2. Disease-illness	2. Comprehensive
3. Shared information and decision-making	3. Coordinated
4. Dentist-patient relationship	4. Continuous
5. Dentist's self-awareness	
6. Empathy	
7. Communication	
8. Pain and anxiety management	

The 2 domains with 12 attributes and their definitions were synthesized. We also show some participant quotes to support these attributes.

Patient-centered interpersonal care

1. Whole person

When delivering services to patients, dentists need to consider their mental and physical well-being, as well as their preferences, interests, and values regarding their care. Additionally, dentists should recognize the patient's family dynamics and the impact of their residential community and consider their personal backgrounds, including factors such as education, religion, ethnicity, occupation, and lifestyle. This comprehensive approach acknowledges the societal, cultural, and environmental factors influencing patients' lives. By gathering information

related to these aspects, dentists can better tailor care and treatment plans to meet the individual needs of their patients.

“I've had the experience of not being able to pay attention to the difficulty of the patient's condition. He arrived much later than the scheduled time. I found out later that he had been in an accident and injured his leg, but I did not notice the wounded leg because I was already upset with the patient. I was so guilty from that case,” one of the dentists said.

“Usually, I carefully observe and study the medical history of the patient including asking about their life and background to get to know the patient better, especially child patients in my area of responsibility,” a dentist in a rural area said.

2. Disease and illness

Dentists can evaluate various aspects of the patient's well-being, such as their understanding and beliefs about good health, their present health status, the progression of any illnesses or diseases, and their past encounters with illness. They can delve deeply into the patient's experience of illness, including their perceptions of the condition, their emotional response to it, and how the disease or illness affects their daily life, work, family, and society. Furthermore, dentists can assess patients' expectations regarding treatment and anticipated health outcomes.

“Dentists and doctors alike should use this concept to care for their patients as it's a very useful basic approach. This allows us to assess and care for patients in the most difficult conditions,” the expert said.

"I'm going to apply to be a police officer, but first there is a physical examination report that I need to treat my 7 decayed teeth. Yesterday, I asked to leave the camp to seek treatment with you. I only have 3 days left before the application deadline. Could you do it for me doctor?"

The expert talked about his patient, for example, using disease and illness concepts to explore the case even though it took too much time to finish all the treatment needed in one visit. The expert realized that his patient valued the ability to apply for a position as a police officer and was willing to do the treatment during that visit.

3. Shared information and decision-making

Once information regarding the illness and disease diagnosis has been collected, dentists, in collaboration with the patient, parent, or family, need to assess the significance of the issues and establish goals. This involves providing comprehensive and suitable information about the treatment plan, available options, advantages, disadvantages, and associated costs. Dentists should encourage and empower patients to actively participate in decision-making regarding treatment options and care, both during and after the treatment. They should create an environment where patients feel comfortable asking questions until they clearly understand the treatment plans and available options.

"My dentist recommended and explained the pros and cons, and the cost of different dentures, and suggested which one was right for me, then I could make the decision together with her," a patient in a rural area said.

4. Dentist-patient relationship

Establishing a positive rapport between the dentist and the patient is advantageous for providing quality care and fostering the patient's ability to engage in self-care. Dentists should demonstrate respect for equality, individual differences, honesty, patient rights, and confidentiality. The dentist-patient relationship should maintain an appropriate level of closeness that respects personal boundaries and fosters mutual trust.

“The most important thing, first and foremost, is that we need to see the patient and any people being seen on the same level as us. Do not view others as being inferior or less knowledgeable than us. This is the beginning of a patient-centered attitude. Everyone is equal. This is the heart of being a patient-centered dentist,” an expert said.

“I don't go to get dental treatment anywhere else. I trust and am used to the dentist here. The dentist is kind, calm, friendly, and provides quality services. Whenever I have a problem with my teeth, I think of this dentist,” a patient in a rural area stated.

5. Dentist’s self-awareness

Dentists need to possess emotional management skills to navigate patient interactions effectively. They must maintain a balanced approach and avoid being excessively influenced by a patient's positive or negative emotions. Dentists should recognize that everyone is a human being with diverse emotional experiences. They should be self-aware and capable of appropriately managing their own emotions when confronted with challenging situations involving individual patients.

“I think it's important to manage your own emotions. A dentist's self-awareness is a necessity. We must try to promote these things. I still have to practice. Sometimes, I get upset but try to hold back while communicating with people during dental services,” an expert said.

6. Empathy

Dentists need to empathize with the patient's emotions and demonstrate understanding and empathy towards their feelings regarding illness or oral health issues. Dentists need to adopt the patient's perspective and approach life or illness from their point of view. By doing so, dentists can provide compassionate and sympathetic care.

“We can recognize patients' dental concerns and show them that we understand and sympathize while maintaining a medical position on a level that is acceptable to both dentists and patients," an expert said.

“The dentist was kind and sympathetic by suggesting the option of getting treatment with a dentist near my home so that I didn't have to go through the hassle of traveling and having to take care of my child,” a patient in a rural area said.

7. Communication

Dentists must have effective communication skills when interacting with patients and their relatives. The dentist needs to provide a proper greeting and introduction, use easily understandable language, actively listen with attention, allocate sufficient time for patients and relatives, and employ appropriate verbal and non-verbal communication techniques. Utilizing

various media for explanations can also be beneficial. Furthermore, the dentist should assess and confirm the patient's understanding during the consultation to ensure effective communication.

“Dentists explain things very thoroughly. Sometimes, I do not understand, so the dentist calmly tries to explain and let me ask questions,” a patient said.

“I have to admit that those in the dentistry profession, no matter where he/she is, he/she'll talk politely, have respectful manners, and explain things very well,” A patient said.

8. Pain and anxiety management

Dentists must prioritize the patient's comfort when providing services or performing procedures by considering their pain sensitivity and effectively addressing dental fear or anxiety. This entails being attentive to the patient's pain thresholds, employing appropriate pain management techniques, and employing strategies to alleviate dental-related fears and anxieties. The dentist's ability to skillfully manage these aspects is crucial in ensuring a positive and comfortable experience for the patient during dental procedures.

“What I realized was that the service was soft, polite, gentle, painless, and attentive to my needs,” a patient said.

“I'm afraid of dental treatment every time, but the dentist will make me relax by talking and starting with a simple procedure,” a patient said.

Patient-centered integrated care

1. Accessible

The dentist plays a key role in managing the efficiency and convenience of dental services, ensuring that they are delivered promptly and comprehensively based on each patient's specific needs. This includes prioritizing punctuality, facilitating the rescheduling of appointments when necessary, and ensuring easy access to the dentist when additional assistance is required. The dentist's responsibility lies in effectively addressing these aspects to enhance the overall management of ease and convenience for patients seeking dental care.

"I used to have to lie in the dental chair for hours. The dentist still didn't come to me until finally, I had to get out of the clinic without any dental treatment," a patient said about her experience.

"It would be nice to go to the dentist whenever needed. Usually, it takes a long time to get to the dentist," a patient offered.

2. Comprehensive

Dentists should be competent to offer a wide range of dental treatments, particularly primary procedures, based on their expertise. This encompasses oral health treatments, preventive measures, promotion, and rehabilitation to ensure ongoing oral well-being. Their expertise addresses various oral health issues, such as teeth, gums, and oral tissues, while also considering the correlation between oral health and systemic conditions. Dentists must be equipped to cater to patients of all age groups and provide appropriate treatments and care.

"In my opinion, patient-centered care means continuing long-term care that focuses on health promotion rather than on occasional treatment," an expert stated.

"It is taking care of the whole mouth. Not just taking care of some teeth, but some problems that patients encounter. We need to plan for both oral care and follow-up appointments, and if there is any systemic disease involved, we need to help the patient to take good care of the oral cavity," an expert discussed.

3. Coordinated

Dentists play a crucial role in managing coordination between patients, owner dentists, other dentists, or specialists within the same dental office or across different dental offices. This coordination extends to collaborating with dental assistants and staff within the dental department and coordinating with personnel across different departments within the same healthcare unit to prioritize the patient's health and well-being in a patient-centered manner.

"I must take care of an oral cancer patient in my area. He has a lot of pain. I had to coordinate with the palliative doctor and oral surgeon about a treatment plan for pain control medication. This is the coordinating role of primary care dentists," a dentist in primary care explained.

4. Continuous

The dentist in charge ensures continuity of treatment or procedures that necessitate ongoing care, such as periodontitis management or follow-up after denture placement. This involves scheduling regular follow-up appointments to maintain oral health (periodic recall) and ensuring the seamless transfer of information and records when patients are referred between dentists or services (record continuity)(202).

"When referring a patient for treatment to an oral surgeon and a palliative doctor, I must provide complete patient history information and call coordination to ensure continuity of care," a dentist in primary care said.

1.2. Exploratory factor analysis (EFA)

1.2.1. EFA of patient perception of patient-centered care of dentist (PCCDS-P version)

Background of the patient participants

One thousand five hundred twenty-seven participants completed the questionnaire, with 24 incomplete responses excluded from the analysis. Among the participants, 336 were included in the exploratory factor analysis (EFA) group, while 1,167 were included in the confirmatory factor analysis (CFA) group. Most participants (68.9%) identified as female; the average age was 41.05 ± 16.05 years. Approximately 48.7% of the participants reported having government universal coverage scheme insurance. Chi-square tests indicated no significant differences in demographic characteristics between the two groups. For a more detailed breakdown of the demographic distribution of the divided sample data, please refer to Table 16.

Table 16 Characteristics of the EFA and CFA sample, Total N = 1,503.

Characteristics	n (%)		
	EFA (n=336)	CFA (n=1167)	p-value*
Gender			
Male	110 (32.7)	358 (30.7)	0.47
Female	226 (67.3)	809 (69.3)	
Age (Yrs.) Mean 41.05 (16.05)			
18-29	97 (28.9)	340 (29.1)	0.63
30-39	64 (19.0)	234 (20.1)	
40-49	62 (18.5)	198 (17.0)	
50-59	58 (17.3)	233 (20.0)	
60-70	55 (16.4)	162 (13.9)	
Highest education			
Primary school	99 (32.5)	234 (31.0)	0.73
High school	54 (17.7)	153 (20.3)	
Bachelor and higher	56 (18.4)	120 (15.9)	
Insurance**			
CSMBS	98 (29.2)	354 (30.3)	0.56
UCS	172 (51.2)	560 (48.0)	
SSS	66 (19.6)	253 (21.7)	
Hospital size			
Small (≤30 beds)	191 (51.2)	631 (54.1)	0.35
Large (>30 beds)	145 (48.8)	536 (45.9)	
Frequency dental visit within 24-month			
2 times	152 (45.2)	587 (50.3)	0.26
3 times	123 (36.6)	383 (32.8)	
>3 times	61 (18.2)	197 (16.9)	

* Pearson $\chi 2$ test P-value, ** CSMBS = Civil Servant Medical Benefit Scheme; UCS= Universal Coverage Scheme; SSS= Social Security Scheme

As a result of the item analysis, the mean score of each of the 45 items was 3.62-4.34, and the range of the standard deviation was 0.81-1.15. All items have skewness and kurtosis within a normal range of ± 2.0 (29) (Table 17).

Table 17 Descriptive statistics of each statements for EFA (N=336)

No	Item No.	Item	Range	Mean	SD	Skewness	Kurtosis
1	wp1.1	Your dentist asks about your general life, such as where is your house, work, study, family, and friends.	1-5	3.62	1.151	-0.629	-0.239
2	wp2.2	Your dentist considered your general life into your care plan.	1-5	3.81	1.08	-0.797	0.173
3	wp3.3	Your dentist responds to your oral health opinions.	1-5	4.22	0.8835	-0.99	0.63
4	wp4.4	Your dentist asks about limitations or obstacles related to your care plan such as limited time, travel expenses.	1-5	3.95	1.009	-0.802	0.219
5	wp5.5	Your dentist considered your limitations or obstacles into your care plan.	1-5	4.05	0.987	-0.943	0.461
6	di1.6	Your dentist tried to find out the cause of your illness, not only by examining the oral cavity but also asking about other causes such as mental state, stress, other related habits.	1-5	3.87	1.062	-0.792	0.124
7	di2.7	Your dentist asks about your idea of what you are sick with.	1-5	3.97	0.994	-0.775	0.126
8	di3.8	Your dentist let you tell your worry about your oral health.	1-5	4.00	0.981	-0.802	0.173
9	di4.9	Your dentist asks about the impact of oral illness on your daily life, work, or school.	1-5	3.92	1.002	-0.734	0.051
10	di5.10	Your dentist asks about your expectation of this visit.	1-5	3.89	1.013	-0.752	0.164
11	sd1.11	Because of Your dentist's explanation, you know that the treatment outcome depends on the cooperation between you and your dentist.	1-5	4.12	0.912	-0.858	0.353
12	sd2.12	Your dentist enhances you (and your relatives) to participate in decision-making to choose the appropriate treatment for you.	1-5	3.99	0.959	-0.725	0.054
13	sd3.13	Your dentist gives you (and your relatives) the opportunities to joint for setting treatment goals.	1-5	3.94	0.980	-0.775	0.267
14	sd4.14	Your dentist describes the treatment plan and procedures, as well as the duration of the treatment.	1-5	4.14	0.927	-0.864	0.207
15	sd5.15	Your dentist explains advantages, disadvantages, costs, treatment options, and possible treatment outcomes.	1-5	4.23	0.883	-0.985	0.419

No	Item No.	Item	Range	Mean	SD	Skewness	Kurtosis
16	dp1.16	Your dentist treated with respect for being equal, dignified and respecting differences.	1-5	4.24	0.893	-1.059	0.644
17	dp2.17	I have never had any worries when my oral health was taking care by dentist here.	1-5	4.2	0.879	-0.949	0.47
18	dp3.18	I trust in my dentist.	1-5	4.29	0.874	-1.109	0.685
19	dp4.19	I am confident that I will be able to properly maintain my own oral health when I am taken care by the dentist here.	1-5	4.27	0.812	-0.809	-0.061
20	dp5.20	Your dentist takes very good care of you and made you come back here regularly.	1-5	4.29	0.839	-1.03	0.594
21	sa1.21	Your dentist is in a normal mood and enthusiastic while serving you.	1-5	4.34	0.82	-1.083	0.602
22	sa2.22	Your dentist can manage their emotions well even in difficult situations involving caring for you.	1-5	4.08	0.902	-0.816	0.446
23	em1.23	Your dentist understands and see illness or worries in the same as your perspective.	1-5	4.19	0.861	-0.941	0.766
24	em2.24	Your dentist clearly show sympathy despite the complexity and difficult of your treatment procedure.	1-5	4.34	0.82	-1.083	0.602
25	em3.25	After the dental treatment, your dentist asks or gave you an opportunity to share your feelings and opinions about that treatment.	1-5	4.1	0.915	-0.875	0.57
26	an1.26	Dentist talked to me to relieve my worries and feel more comfortable before dental treatment.	1-5	4.17	0.884	-0.890	0.502
27	an2.27	Your dentist reminds you before doing some procedures that may cause pain, such as starting to inject an anesthetic, starting to grind the teeth.	1-5	4.14	0.927	-0.864	0.207
28	an3.28	Your dentist asks periodically about your pain while providing dental treatment.	1-5	4.23	0.883	-0.985	0.419
29	co1.29	Your dentist has a friendly greeting.	1-5	4.2	0.879	-0.949	0.47
30	co.2.30	Your dentist gave you enough time to describe your symptoms and illness.	1-5	4.29	0.874	-1.109	0.685
31	co3.31	Your dentist attentively listens, made eye contact, and looked at you more than looking at documents or computer screens.	1-5	4.27	0.812	-0.809	-0.061
32	co4.32	Your dentist talks with easy words not too many medical terms.	1-5	4.29	0.839	-1.03	0.594

No	Item No.	Item	Range	Mean	SD	Skewness	Kurtosis
33	co5.33	Your dentist uses equipment or media such as brochures, pictures, videos, or x-ray films his/her explanations and advice	1-5	4.34	0.82	-1.083	0.602
34	co6.34	Your dentist asks you to ask if you had any doubts, questions, or did not understand any point.	1-5	4.08	0.902	-0.816	0.446
35	cp1.35	The oral examination of your dentist covers all parts of the mouth, not only the teeth or gums where you have problems.	1-5	4.19	0.861	-0.941	0.766
36	cp2.36	Because of your dentist explanation, you understand that the general health and oral health related.	1-5	3.99	0.959	-0.725	0.054
37	cp3.37	Because your dentist advice, you can regularly brush your teeth with fluoride toothpaste twice a day and before bedtime, you reduce consumption of sugary foods, soft drinks, etc.	1-5	4.17	0.836	-0.753	0.069
38	cd1.38	Coordination between dentists and dentists/dental staffs are smooth, comfortable and fast.	1-5	4.17	0.836	-0.753	0.069
39	cd2.39	Dentist coordinates with other departments such as medical department, dispensing department, cashier based on patient benefits.	1-5	4.16	0.86	-0.843	0.474
40	cn1.40	Your dentist made an appointment for ongoing treatment or follow-up treatment as necessary.	1-5	4.16	0.868	-0.873	0.506
41	cn2.41	If there is a change of dentist or a referral to another dentist, the new dentist can continue the treatment smoothly.	1-5	4.04	0.943	-0.828	0.391
42	cn3.42	Your dentist advice for regular oral health check-up.	1-5	4.17	0.88	-0.786	-0.038
43	ac1.43	You have received the treatment on time.	1-5	4.16	0.939	-1.057	0.777
44	ac2.44	You have received all treatments as you need at this visit.	1-5	4.23	0.873	-0.972	0.456
45	ac3.45	You can easily access or meet your dentist when you need.	1-5	4.22	0.906	-1.061	0.726

IC = Integrated Care, CO = Communication, DP = Dentist-Patient relationship, EM = Empathy, AN = Pain and anxiety management, SD = Shared information and decision making, DI = Disease and Illness, WP = whole person

The findings of Bartlett's test of sphericity revealed that the correlation matrix was not random ($\chi 2$= 16,521.434, df = 891, $p < .001$). Additionally, the KMO statistic yielded a value of

.96, surpassing the minimum standard required for conducting factor analysis (Table 18). Thus, it was concluded that the correlation matrix was suitable for factor analysis.

A range of EFA models comprising five to seven factors were compared using parallel analysis and the scree plot. Three items (di1.6, dp1.16, an1.26) exhibited cross-loading, with similar loadings on two factors, differing by less than .20 (30). The most optimal model, consisting of seven factors, was identified using varimax rotation with parallel analysis. This model comprised 42 items. The full 45 items output of EFA can see in Appendix E.

The four pre-specified factors, accessible, continuous, coordinated, and comprehensive, were merged into the integrated care (IC) factor, reflecting the integrated function of primary care. Two anxiety management items (an2.27, an3.28) and three empathy items were grouped under the empathy and anxiety management (EAM) factor. Additionally, two items from the self-awareness component (sa1.21, sa2.22) were included in the dentist-patient relationship (DP) factor.

The fitted model accounted for 76.18% of the total explained variance, featuring seven factors: Integrated Care (IC) with 11 items, Holistic (HO) with five items (previously referred to as Whole Person), Communication (CO) with six items, Dentist-Patient Relationship (DP) with six items, Empathy and Anxiety Management (EAM) with five items, Shared Information and Decision-Making (SD) with five items, and Disease and Illness (DI) with four items. Table 18 presents the eigenvalues, factor loadings, percentage of variance, cumulative percentage of variance, and proposed factor names.

The internal consistency analysis of the EFA dataset for each dimension is presented in Table 19. The overall scale's internal consistency, measured by Cronbach's alpha, was 0.98. The internal consistency for each dimension ranged from 0.93 to 0.96.

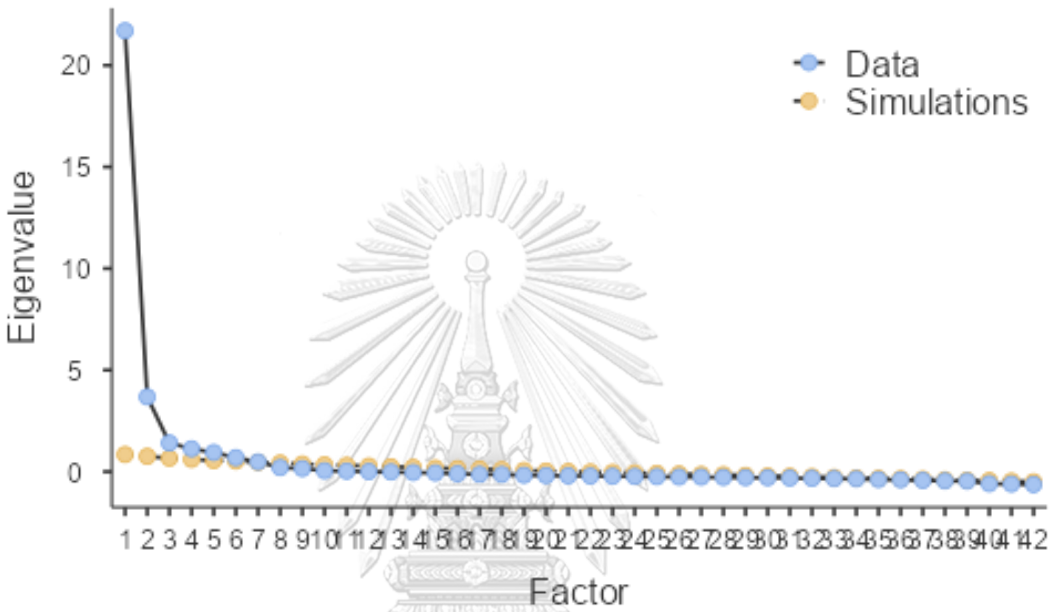

Figure 14 Scree plot generated in Jamovi software for 42-item PCCDS-P version.

Table 18 Factor loading, % of variance and Cumulative % of variance of the 42-item PCCDS-P version.

Item Id.	Communalities	Factor						
		IC	HO	CO	DP	EAM	SD	DI
ac2.44	0.789	0.775						
cd1.38	0.787	0.762						
cn3.42	0.738	0.736						
ac1.43	0.655	0.714						
cn1.40	0.748	0.697						
cd2.39	0.672	0.695						
ac3.45	0.635	0.682						
cp1.35	0.656	0.614						
cp3.37	0.686	0.609						
cp2.36	0.706	0.578						
cn2.41	0.557	0.575						
wp4.4	0.895		0.894					
wp3.3	0.873		0.882					
wp5.5	0.863		0.874					
wp1.1	0.717		0.807					
wp2.2	0.698		0.762					
co5.33	0.748			0.766				
co4.32	0.781			0.750				
co1.29	0.772			0.722				
co6.34	0.725			0.696				
co2.30	0.678			0.636				
co3.31	0.562			0.469				
dp3.18	0.801				0.713			
dp4.19	0.832				0.697			
dp2.17	0.737				0.641			
sa2.22	0.723				0.632			
sa1.21	0.740				0.610			
dp5.20	0.784				0.608			
em3.25	0.881					0.759		

Item Id.	Communalities	Factor						
		IC	HO	CO	DP	EAM	SD	DI
em2.24	0.876					0.741		
em1.23	0.850					0.700		
an3.28	0.800					0.680		
an2.27	0.740					0.590		
sd5.15	0.894						0.757	
sd3.13	0.847						0.733	
sd2.12	0.827						0.693	
sd4.14	0.810						0.687	
sd1.11	0.701						0.573	
di2.7	0.834							0.723
di5.10	0.838							0.716
di3.8	0.824							0.679
di4.9	0.714							0.603
Eigenvalue		8.063	5.074	4.453	3.952	3.862	3.747	2.842
% of Variance		19.198	12.082	10.602	9.409	9.194	8.921	6.767
Cumulative % of variance		19.198	31.280	41.883	51.292	60.487	69.407	76.175

IC = Integrated Care, HO = Holistic, CO = Communication, DP = Dentist-Patient relationship, EAM = Empathy and Anxiety management, SD = Shared information and decision making, DI = Disease and Illness, wp = whole person, Bartlett's test of sphericity: $\chi 2$= 16,521.434, df = 891, $p < .001$, KMO = .96

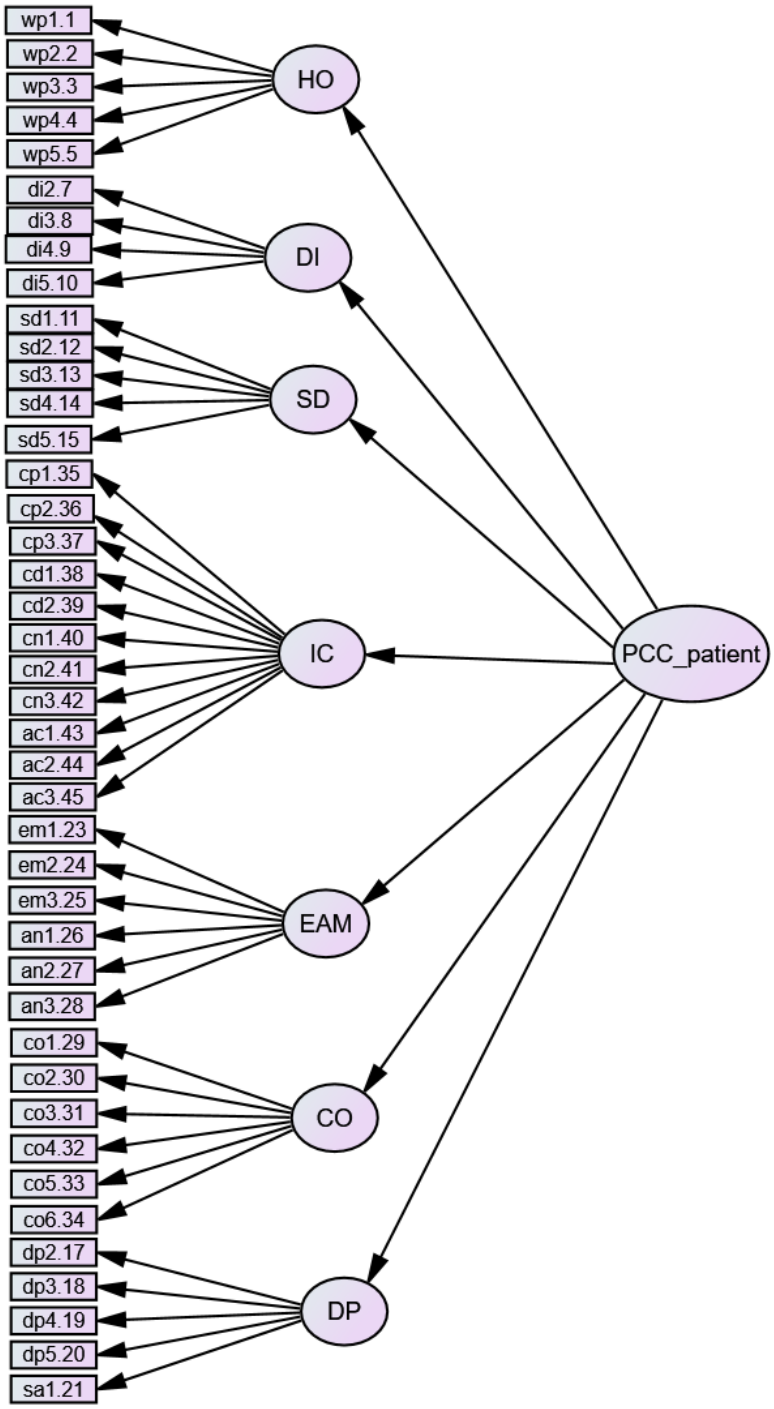

Figure 15 PCCDS-P version structure model with 42 items 7 factors

Table 19 Internal consistency of the PCCDS-P version with 336 patients' data as estimated by Cronbach's alpha.

Factors	Number of items	Range of item-total correlations	Cronbach's alpha	Range of alphas if individual item deleted
1. Integrated care (IC)	11	.73-.87	.96	.95-.96
2. Holistic (HO)	5	.81-.91	.95	.93-.95
3. Communication (CO)	6	.69-.83	.93	.91-.93
4. Dentist-Patient relationship (DP)	6	.78-.88	.95	.93-.94
5. Empathy and Anxiety management (EAM)	5	.82-.91	.96	.94-.96
6. Shared information and decision-making (SD)	5	.80-.91	.95	.94-.95
7. Disease and Illness (DI)	4	.94-.88	.94	.91-.93
Total	42		.98	

1.2.2. EFA of patient-centered care of dentist scale (PCCDS-D version)

Background of the dentist participants

The total of 1,059 dentists responded to the questionnaire. 305 and 754 participants were randomized into EFA and CFA group. Most participants (75.5%) were female, and their mean practice experience was 11.74 ± 8.80 years. A series of $\chi 2$ tests indicated that the two samples were similar on all characteristics. The demographic distribution of the split sample data was displayed in Table 20.

Table 20 Characteristics of the EFA and CFA of dentist sample, Total N = 1,059.

Characteristics	n (%)		
	EFA(n=305)	CFA(n=754)	p-value*
Gender			
Male	73 (23.9)	186 (24.7)	0.80
Female	232 (76.1)	568 (75.3)	
Specialty			
Yes	163 (53.4)	369 (48.0)	0.18
No	142 (46.6)	385 (51.1)	
Hospital size			
Small (≤30 beds)	181 (59.3)	455 (60.3)	0.76
Large (>30 beds)	124 (40.7)	299 (39.7)	
Experience (yrs.) Mean 11.74, (8.80)			
0 to 5	99 (32.5)	234 (31.0)	0.73
6 to 10	54 (17.7)	153 (20.3)	
11 to 15	56 (18.4)	120 (15.9)	
16 to 20	36 (11.8)	100 (13.3)	
> 20	60 (19.7)	147 (19.5)	

* Pearson $\chi 2$ test P-value

As a result of the item analysis, the mean score of each of the 61 items was 2.95-4.66, and the range of the standard deviation was 0.57-1.22. All items have skewness and kurtosis within normal range of ± 2.0 (29) (Table 21).

Table 21 Descriptive of survey 305 dentists' data for EFA

No	Item No.	Item	Range	Mean	SD	Skewness	Kurtosis
1	wp1.1	You ask about concerns of the patient's oral illness.	1-5	3.1	1.047	0.029	-0.365
2	wp2.2	You ask about patient general life, such as where he/she live, work, study, family, and friends.	1-5	3.3	1.094	-0.289	-0.466
3	wp3.3	You use the general context according into consideration when designing the patient's oral health care.	1-5	4.17	0.885	-0.971	0.598
	wp4.4	You ask about the impact of oral illness on the patient's daily life, work, or school.	1-5	4.1	0.777	-0.432	-0.351
5	wp5.5	You investigate the cause of the illness, not only by examining the oral cavity, but also by inquiring about other causes such as eating habits, mental state, stress, etc.	1-5	4.11	0.875	-0.902	0.544
6	wp6.6	You ask about the patient's expectation of this visit.	1-5	4.37	0.785	-1.373	2.268
7	di1.7	You emphasize what you teach or recommend until confident that the patient will be able to take care of their own oral health appropriately.	1-5	3.52	1.028	-0.3	-0.481
8	di2.8	You ask the patient what they think they are sick with.	1-5	3.18	1.161	-0.236	-0.79
9	di3.9	After the dental treatment, you give the patient an opportunity to share their feeling and opinion toward the treatment.	1-5	3.15	1.066	-0.088	-0.458
10	di4.10	When a patient tells you about his illness history, concerns, opinions about his illness, you understand and see illness or concerns in the same perspective as the patient.	1-5	3.21	1.066	-0.103	-0.598
11	di5.11	You are patient and calm despite the difficulties in providing care to patients.	1-5	3.29	1.116	-0.235	-0.593
12	sd1.12	You have explained and demonstrated that the healing effect that will occur is the result of cooperation in the patient's self-care and your treatment.	1-5	3.21	1.066	-0.103	-0.598
13	sd2.13	You show patients trust in you.	2-5	4.49	0.696	-1.282	1.456
14	sd3.14	Seeing the patient as a human and equal to you is the most important consideration when caring for patients.	2-5	4.08	0.892	-0.771	0.173
15	sd4.15	You show empathy to the patient.	2-5	4.24	0.809	-0.823	0.003
16	sd5.16	You treat patients with respect and dignity and honoring patients and relatives.	2-5	4.43	0.715	-1.034	0.419
17	sd6.17	You choose a method of treatment that is more convenient or easy for you than one that is suitable for the patient.	1-5	3.21	1.066	-0.103	-0.598
18	dp1.18	You provide services in an appropriate manner without emotion while providing services.	1-5	4.4	0.709	-1.006	0.662

No	Item No.	Item	Range	Mean	SD	Skewness	Kurtosis
19	dp2.19	You have endeavored to coordinate to provide patients with the best possible care. Although sometimes do not follow the guidelines.	1-5	4.35	0.745	-0.987	0.513
20	dp3.20	You have different feelings and attitudes in providing services to patients with different statuses, physical conditions, disabilities, dressing.	1-5	3.21	1.066	-0.103	-0.598
21	dp4.21	You coordinate with others with a patient-centered mindset.	2-5	4.18	0.73	-0.629	0.153
22	dp5.22	You avoid serving patients you know are difficult to deal with.	1-5	3.21	1.066	-0.103	-0.598
23	dp6.23	You treat all patients equally even though you know they are difficult patients to deal with.	1-5	4.10	0.777	-0.432	-0.351
24	dp7.24	You make appointments for patients to receive ongoing treatment or follow-up treatment as necessary.	1-5	3.32	0.997	-0.241	-0.283
25	sa1.25	You examine the entire mouth, not only the teeth or gums where the patient has problems.	1-5	4.24	0.757	-0.955	1
26	sa2.26	Sometimes you show dissatisfaction towards an assistant or staff member.	1-5	3.32	0.997	-0.241	-0.283
27	sa3.27	When you become frustrated or angry, your assistant, staff, or patient, you can manage your emotions properly.	1-5	4.10	0.777	-0.432	-0.351
28	em1.28	When a patient needs to see you. You give patient easy access to you.	1-5	4.22	0.738	-0.824	0.8
29	em2.29	When it needs to refer, you will record detailed patient data, prepare the necessary documents, such as clear identification, illustrations, film x-ray files, tooth models, etc.	2-5	4.11	0.772	-0.576	-0.081
30	em3.30		2-5	3.3	0.997	-0.241	-0.283
31	em4.31	You provide all treatments as patient need and clinical agreement at that visit.	2-5	4.10	0.775	-0.526	-0.241
32	em5.32	You care for vulnerable patients such as the disabled, the elderly, children who lack caregivers, ineligible people, etc. receive convenient and appropriate services.	1-5	3.24	1.073	-0.231	-0.548
33	an1.33	You observe the patient's posture, expression, and language while taking history, counselling, giving advice, both during dental work, before and after the service.	1-5	4.38	0.755	-1.062	0.701
34	an2.34	When observing the patient's attitude and language expressive frustration or worry, doubt, etc. You respond appropriately.	1-5	4.68	0.538	-1.448	1.157
35	an3.35	You listen intently, make eye contact, and look at the patient, rather than looking at documents or computer monitors, and expressed interest in their words.	2-5	4.55	0.644	-1.273	1.086

No	Item No.	Item	Range	Mean	SD	Skewness	Kurtosis
36	co1.36	Although you aware of the concerns associated with his patients' oral health, you do not change his approach to patient care.	1-5	3.24	1.073	-0.231	-0.548
37	co2.37	You remind me every time. Before doing some procedures that may cause pain, such as starting to inject an anesthetic, starting to grind the teeth, or moving the dental chair up and down quickly, etc.	1-5	4.07	0.782	-0.622	0.284
38	co3.38	You give patients enough time to explain their symptoms and medical/dental history.	1-5	4.03	0.809	-0.586	-0.002
39	co4.39	You give an opportunity for patients to tell their needs and opinion about their oral health.	2-5	4.34	0.696	-0.756	0.107
40	co5.40	You often speak hastily or cut short while the patient is describing his illness.	1-5	4.19	0.684	-0.429	-0.165
41	co6.41	You use devices or media such as brochures, pictures, models, videos, clips, or to view X-ray films for diagnosis, treatment, or advice.	1-5	4.34	0.696	-0.756	0.107
42	co7.42	After describing the diagnosis, treatment plan, recommendations, and then you ask the patient again if they have any doubt.	1-5	3.94	0.929	-0.613	-0.272
43	co8.43	You have described the pros and cons, costs, treatment options and possible consequences of treatment.	2-5	4.19	0.734	-0.589	-0.042
44	co9.44	You describe the treatment plan and procedures, as well as the duration of the treatment.	2-5	4.19	0.684	-0.429	-0.165
45	cp1.45	You give advice on how to take care of oral health and teeth.	1-5				
46	cp2.46	You give opportunities to patients (and relatives), have jointly set treatment goals with you.	1-5	4.08	0.836	-0.639	-0.076
47	cp3.47	When a patient has a systemic disease related to oral health, you explain to the patient that those diseases are linked to oral health.	1-5	4.10	0.777	-0.432	-0.351
48	cd1.48	The coordination between you and other dentists or with staff in the dental department is smooth, convenient, and fast.	1-5	4.19	0.684	-0.429	-0.165
49	cd2.49	You feel uncomfortable or intimidated when consulting with other dentists in the dental department.	1-5	4.34	0.696	-0.756	0.107
50	cd3.50	You endeavor to coordinate to provide patients with the best possible care with a patient-centered approach. Although sometimes do not follow the established guidelines.	1-5	4.19	0.818	-0.854	0.447
51	cd4.51	You coordinate with others with a patient-centered mindset.	1-5	4.32	0.723	-0.842	0.449
52	cn1.52	You make appointments for patients to receive ongoing treatment or follow-up treatment as necessary for the disease or procedure.	1-5	4.31	0.739	-0.899	0.714
53	cn2.53	When referring patients to receive treatment with other dentists both	1-5	4.19	0.794	-0.69	-0.075

No	Item No.	Item	Range	Mean	SD	Skewness	Kurtosis
		inside and outside the agency, you will record detailed information and prepare necessary documents, such as specifying a clear location. illustration drawing Film or x-ray file, tooth model, etc.					
54	cn3.54	After the treatment of various dental procedures has been completed, you advise patients to check their oral health periodically.	1-5	4.31	0.739	-0.899	0.714
55	cn4.55	Patients in your area of responsibility when formally referred to other care facilities generally do not monitor whether the patient receives the services to which you refer.	1-5	4.34	0.696	-0.756	0.107
56	cn5.56	When the patient is referred to another service and if there is a treatment plan that requires a return for treatment with you again, you will follow up to receive treatment and return to treatment with you successfully.	1-5	3.94	0.929	-0.613	-0.272
57	ac1.57	Your patients receive services on time.	1-5	4.08	0.836	-0.639	-0.076
58	ac2.58	You postpone appointments with patients oftenly.	1-5	4.38	0.755	-1.062	0.701
59	ac3.59	You provide all types of patient services according to the necessity of the examination results and have agreed and informed the patient at that time.	2-5	4.21	0.712	-0.677	0.418
60	ac4.60	When the patient needs to see you, you allow the patient to conveniently access or request to see you.	1-5	4.18	0.787	-0.653	-0.097
61	ac5.61	You consider taking care of vulnerable patients, such as the disabled, the elderly, children without caregivers, and people without rights, etc., to receive services conveniently and appropriately.	1-5	4.32	0.741	-0.79	0.198

EFA results for evaluating construct validity revealed data are factorability.: the Kaiser-Meyer-Olkin (KMO) =.885, and Bartlett's test of sphericity p-value < .001 (chi-square= 18,072.243). Various EFA models, encompassing a range of seven to nine factors, underwent comparison through parallel analysis and the scree plot. Using varimax rotation, a seven-factor model was developed with 36 items. The study examined and dropped a set of 14 items that showed similar factor loading on more than two factors with a difference of less than 0.20 (214). 11 items with factor loading less than 0.4 were deleted (199).

Four pre-specified factors, accessible, continuous, coordinated, and comprehensive, were combined into integrated care (IC) related to primary care integration. Two anxiety management items (an2.34, an3.35) and three empathy items (em1.28, em2.29, em4.31) were grouped as empathy and anxiety management (EAM). One item related to self-awareness (sa1.25) was added to the dentist-patient relationship (DP) factor. The final model explained 59.84% of the total variance with seven factors named Integrated Care (IC), Holistic (HO), Communication (CO), Dentist-Patient relationship (DP), Empathy and Anxiety management (EAM), Shared information and decision-making (SD), and Disease and Illness (DI). The study also presented the eigenvalue, factor loading, % of the variance, and cumulative % of the variance in Table 22. The proposed name for the "Whole Person" factor was changed to "Holistic" to make it more familiar and easier to interpret. The results of the internal consistency analysis of the EFA data set for each dimension of the PCCDS-D version are presented in Table 23. The overall internal consistency of Cronbach's alpha was 0.93, and

each dimension ranged from 0.81 to 0.90.

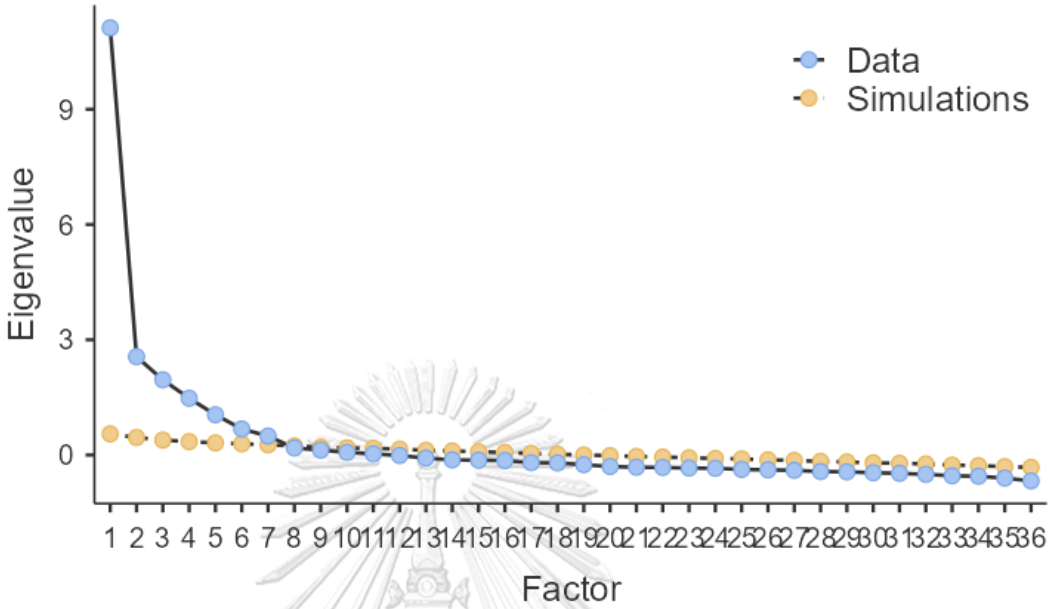

Figure 16 Scree Plot generated in Jamovi software for 36-item PCCDS-D version

Table 22 Factor loading, % of variance and Cumulative % of variance of the 36-item PCCDS-D version.

Item Id.	Communalities	Factor						
		IC	DI	EAM	CO	DP	SD	HO
cd4.51	0.729	0.812						
ac4.60	0.619	0.768						
cd3.50	0.607	0.747						
cn1.52	0.626	0.728						
cn2.53	0.522	0.678						
ac3.59	0.503	0.644						
cp2.46	0.481	0.642						
ac5.61	0.419	0.528						
di3.9	0.771		0.834					
di4.10	0.657		0.753					
di5.11	0.530		0.665					
di2.8	0.409		0.604					

Item Id.	Communalities	Factor						
		IC	DI	EAM	CO	DP	SD	HO
di1.7	0.547		0.582					
an2.34	0.754			0.819				
em1.28	0.666			0.763				
an3.35	0.650			0.728				
em2.29	0.586			0.702				
em4.31	0.451			0.531				
co8.43	0.745				0.771			
co9.44	0.713				0.716			
co3.38	0.544				0.608			
co2.37	0.557				0.606			
co4.39	0.513				0.557			
co7.42	0.480				0.502			
dp2.19	0.854					0.872		
dp1.18	0.745					0.804		
dp4.21	0.666					0.779		
sa1.25	0.529					0.684		
sd5.16	0.720						0.749	
sd4.15	0.690						0.718	
sd2.13	0.563						0.570	
sd3.14	0.466						0.445	
wp6.6	0.643							0.692
wp5.5	0.631							0.651
wp4.4	0.471							0.466
wp3.3	0.483							0.436
Eigenvalue		4.623	3.635	3.179	3.160	3.012	2.106	1.829
% of Variance		12.841	10.097	8.830	8.777	8.366	5.851	5.080
Cumulative % of variance		12.841	22.938	31.768	40.545	48.911	54.761	59.841

IC = Integrated Care, DI = Disease and Illness, EAM = Empathy and Anxiety management, CO = Communication, DP = Dentist-Patient relationship, SD = Shared information and decision making, HO = Holistic, wp = whole person, KMO =.885, Bartlett's test of sphericity p-value < .001, $\chi 2$ = 18,072.243).

Table 23 Internal consistency of the PCCDS-D version with 305 dentists' data as estimated by Cronbach's alpha.

Factors	Number of items	Range of item-total correlations	Cronbach's alpha	Range of alphas if individual item deleted
1. Integrated care (IC)	8	.57-.76	.90	.88-.90
2. Holistic (HO)	4	.56-.67	.81	.76-.80
3. Communication (CO)	6	.60-.79	.87	.83-.87
4. Dentist-Patient relationship (DP)	4	.72-.83	.90	.84-.88
5. Empathy and Anxiety management (EAM)	5	.57-.76	.86	.81-.85
6. Shared information and decision-making (SD)	4	.65-.70	.83	.78-.81
7. Disease and Illness (DI)	5	.56-79	.85	.78-.86
Total	36		.93	

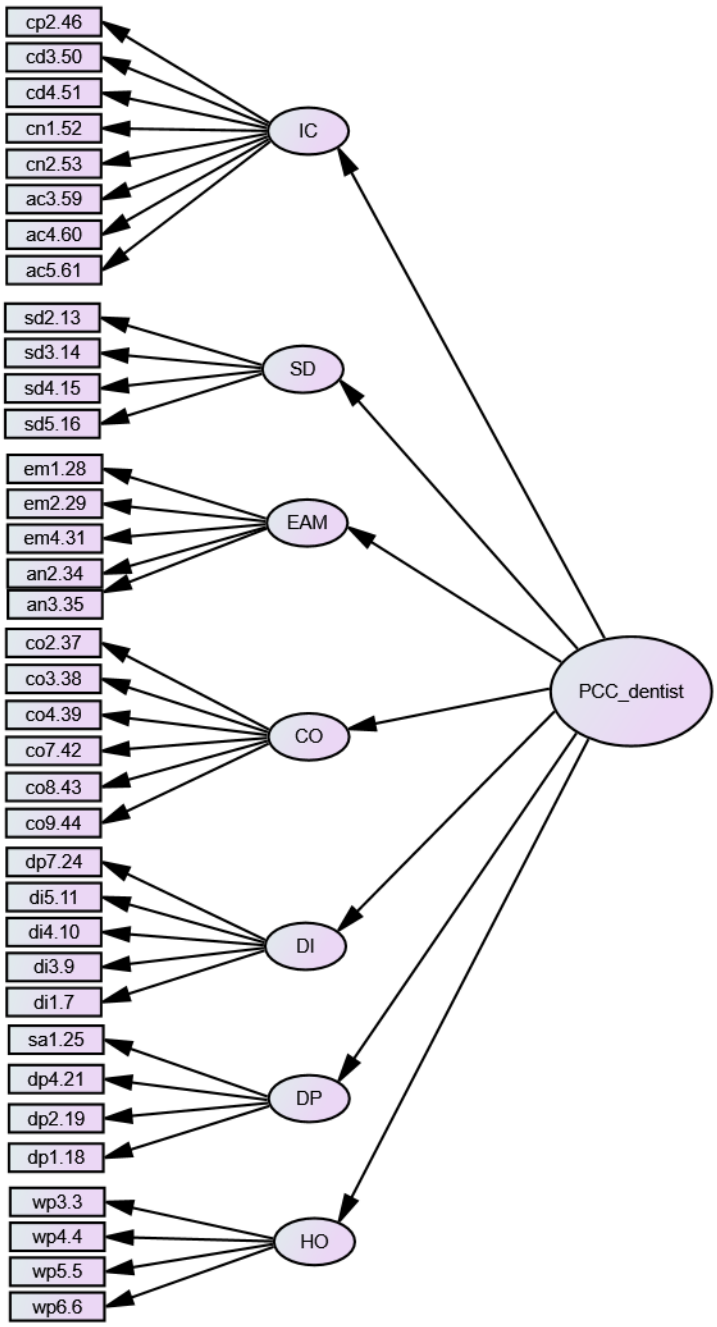

Figure 17 PCCDS-D Version measurement model with 36 items 7 factors

2. PHASE II

2.1. The patient perception of patient-centered care of dentist scale (PCCDS-P version)

2.1.1. Confirmatory factor analysis of PCCDS-P version

Confirmatory factor analysis was employed to assess the construct validity of the PCCDS-P version. Before the analysis, various assumptions, such as univariate normality and multicollinearity, were evaluated and documented in Appendix F. The 1,167 collected data were randomly assigned for the CFA test that data met the necessary criteria to proceed with the CFA to test construct validity. The demographic characteristics of participants were demonstrated in Table 16 in EFA. From phase 1, we explored the construction of patient perception of patient-centered care of the dentist model consisting of 42-item covering seven constructs.

The overall model fit of the initial measurement model of the PCCDS-P version was evaluated. The results revealed inadequate model fit with the data, as indicated by $\chi 2$= 463.460, $\chi 2$/df = 33.104, df=14, p< .001, CFI=.925, TLI=.888, RMSEA=.166. as Figure 18 These findings suggested that the initial model was unsuitable for the empirical data. Consequently, the proposed model was revised and re-evaluated. The final modified CFA revealed the fit indices of the model as follows: $\chi 2$= 10.113, $\chi 2$/df = 1.448, df=7, p=.181, CFI=.999, TLI=.998, RMSEA=.020. (Figure 19). The significant factor loadings ranged from .52 to .87. Square multiple correlations (R2) of components ranged from 0.31 to 0.58. The CR was 0.91, and AVE was .61. (Table 24).

Table 24 Mean, SD, Factor Loading, R^2, AVE, and CR of the PCCDS-P version measurement model.

Component	Mean	SD	Loading	R^2
1. Dentist-patient relationship: DP	6.60	1.15	0.87	0.76
2. Disease and illness: DI	5.85	1.29	0.70	0.49
3. Integrated care: IC	7.01	1.22	0.90	0.81
4. Communication: CO	5.63	1.11	0.83	0.70
5. Share information and decision-making: SD	6.39	1.26	0.76	0.58
6. Holistic: HO	4.59	1.17	0.52	0.27
7. Empathy and anxiety management: EAM	6.39	1.24	0.82	0.67
Construct reliability (CR)	0.91			
Average variance extracted (AVE)	0.61			

The model fit indices: $\chi 2$= 10.113, $\chi 2$/df = 1.448, df=7, p=.181, CFI=.999, TLI=.998, RMSEA=.020

The findings suggested that the adjusted factor structure model was consistent with the empirical data. Additionally, the factor structure observed in the modified model appeared to represent the factor structure of the PCCDS-P version construct, as depicted in Figure19.

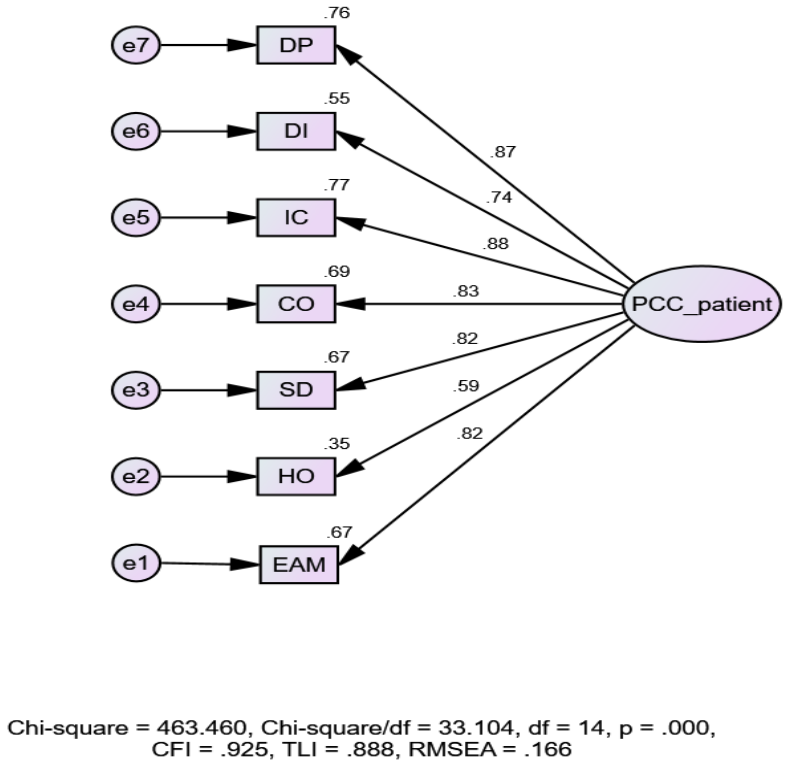

Figure 18 Initial measurement model of the PCCDS-P version

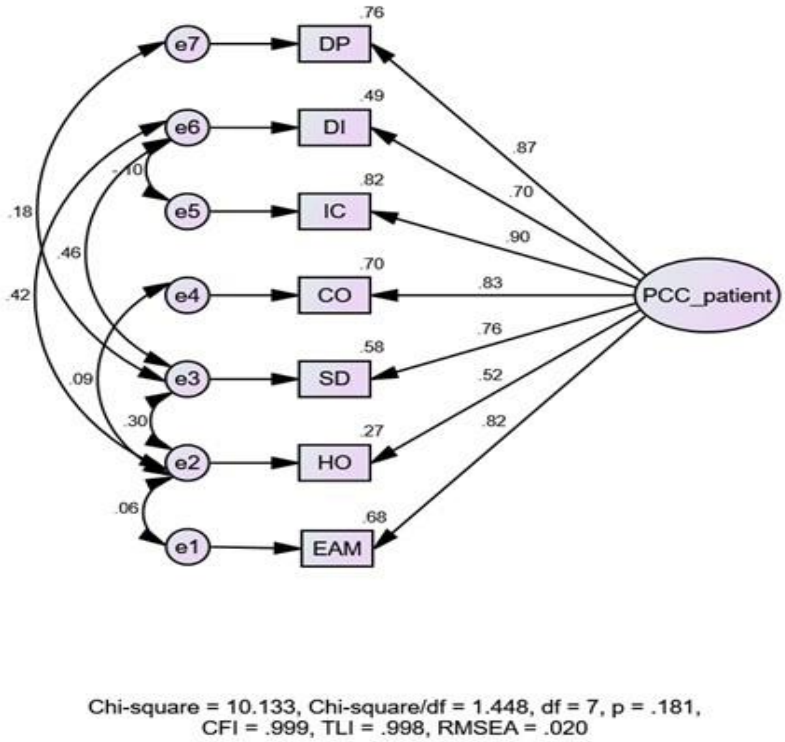

Figure 19 Final modified measurement model of the PCCDS-P version

2.1.2. Measurement invariance: a multigroup analysis

The purpose of this step was to examine the invariance of the PCCDS-P version across two different groups of participants: large and small community hospitals. The PCCDS-P version is a 42-item self-report questionnaire designed to measure the patient perception of patient-centered care received from dentists in primary care in Thailand. The same collected data of CFA was split into large community hospitals (552) and small community hospitals (615). The geographic distribution of participants was demonstrated in Appendix F. The data were 552 participants in large community hospitals (mean age = 41.0, SD = 15.5, 68.7% female) and 615 in small community hospitals (mean age = 41.6, SD = 15.2, 69.8% female). The demographic characteristics of participants show in Table 25.

Table 25 Characteristics of the patient samples in small and large hospitals for multigroup analysis, Total N = 1,167.

Characteristics	n (%)		
	Small hospital (n=615)	**Large hospital (n=552)**	**p-value***
Gender			
Male	186 (30.2)	173 (31.3)	0.69
Female	429 (69.8)	379 (68.7)	
Age (Yrs.) Mean 41.3 (15.3)			
18-29	181 (29.4)	153 (27.7)	0.11
30-39	111(18.1)	116 (21.1)	
40-49	104 (16.9)	99 (17.9)	
50-59	138 (22.4)	95 (17.2)	
60-70	81 (13.2)	89 (16.1)	
Highest education			
Primary school	137 (22.3)	100 (18.1)	0.10
High school	238 (38.7)	243 (44.0)	
Bachelor and higher	240 (39.0)	209 (37.9)	
Insurance* **			
CSMBS	184 (29.9)	158 (28.6)	0.30
UCS	306 (49.8)	261 (47.3)	
SSS	125 (20.3)	1333 (24.1)	
Frequency dental visit within 24-month			
2 times	304 (45.2)	271 (49.1)	0.01**
3 times	184 (29.9)	203 (36.8)	
>3 times	127 (20.7)	78 (14.1)	

* Pearson $\chi 2$ test P-value, **P-value <0.05, *** CSMBS = Civil Servant Medical Benefit Scheme; UCS= Universal Coverage Scheme; SSS= Social Security Scheme

The initial CFA revealed a good fit for the PCCDS-P version in both large and small community hospitals separately, with all models fit indices meeting the recommended thresholds as follow: large hospital (χ^2= 8.996, χ^2/df = 1.000, df=9, p=.438, CFI=1.00, RMSEA=.000), small hospital (χ^2 =4.973, χ^2/df = .995, df=5, p=.419, CFI=.1, RMSEA=.000). However, to determine if the scale was invariant across the two groups, we performed a series of increasingly constrained CFAs, following the guidelines suggested by Cheung and Rensvold,2002 (215). The following invariance levels were tested: configural, metric, scalar, and residual.

Configural invariance: The findings revealed that the factor structure of the PCCDS-P version was consistent across large and small community hospitals, as the configural invariance model exhibited an acceptable fit (χ^2= 7.952, χ^2/df = .994, df=8, p=.438, CFI=1.000, RMSEA=.000).

Metric invariance: Similarly, the metric invariance model, which constrained the factor loadings to be equal across groups, demonstrated an acceptable fit (χ^2= 16.401, χ^2/df = 1.172, df=14, p< .290, CFI=1.000, RMSEA=.012, Δ χ^2= 8.449, Δ df = 1, p<0.207, Δ CFI= 0.001). These results indicate that the factor loadings were invariant between large and small community hospitals.

Scalar invariance: In contrast, the scalar invariance model, which constrained the intercepts to be equal across groups, did not fit the data well (χ^2= 48.708, χ^2/df = 3.247, df=15, p< .001, CFI=.994, RMSEA=.044, Δ χ^2= 32.307, Δ df = 1, p<0.001, Δ CFI= 0.005). This suggests that the intercepts were not equivalent across large and small community hospitals.

Residual invariance: Furthermore, the residual invariance model, which constrained the residual variances to be equal across groups, also showed an inadequate fit ($\chi 2$= 113.770, $\chi 2$/df = 3.555, df=32, p=.181, CFI=.986, RMSEA=.047, Δ $\chi 2$= 65.062, Δ df = 17, p <0.001, Δ CFI= 0.008). These results indicate that the residual variances were not equal between large and small community hospitals.

Overall, the results of the invariance testing suggest that the PCCDS-D version exhibits invariance across large and small community hospitals up to the level of metric invariance, as detailed in Table 26.

Table 26 CFA models and measurement invariance tests of PCCD-P version model.

Data in model	Model	χ^2	df	P	χ^2/df	RMSEA	CFI	$\Delta\chi^2$	Δ df	P	Δ CFI	Pass /Fail
Separated	Large hospital (n=552)	8.996	9	0.438	1.000	0.012	1.000	-	-	-	-	Pass
	Small hospital (n=615)	4.973	5	0.419	0.995	0.009	1.000	-	-	-	-	
Pooled	1.Baseline/ Configural invariance	7.952	8	0.438	0.994	0.000	1.000	-	-	-	-	Pass
	2.Metric invariance (Weak) (2-1)	16.4	14	0.290	1.172	0.012	1.000	8.449	6	0.207	0.001	Pass
	3.Scalar invariance (Strong) (3-2)	48.71	15	<0.001*	3.247	0.044	0.994	32.307	1	<0.001*	0.005	Fail
	4.Residual invariance (Strict) (4-3)	113.8	32	<0.001*	3.555	0.047	0.986	65.062	17	<0.001*	0.008	Fail

*p-value < 0.001 means invariance not supported; RMSEA = Root Mean Square Error of Approximation; CFI = Comparative Fit Index. ΔCFI $\leq$ 0.01 means invariance supported.

2.1.3. Reliability test

The reliability of the PCCDS-P version was evaluated in this research by employing two methods: internal consistency and test-retest reliability. To assess whether all the items in the instrument measured the same attribute, the Cronbach's alpha coefficient method was used for internal consistency reliability. Test-retest reliability was utilized to investigate the consistency of the scale over time.

2.1.3.1. Internal consistency

The findings revealed that the internal consistency of the overall 42-item PCCDS-P version was .93, which is higher than the acceptable threshold typically set at 0.70 for newly developed scales (206). Examining the internal consistency of each dimension, the results indicated that the dimensions of " Dentist-patient relationship," " Disease and illness," “Integrated care,” “Communication,” “Share information and decision-making,” “Holistic,” and " Empathy and anxiety management " had Cronbach's alpha coefficients of .93, .90, .95, .92, .91, .92, and .93, respectively. (see Table 27).

Table 27 Internal consistency of PCCDS-P version of 1,167 patients' data

Component	Number of Items	Cronbach's alpha coefficient
1. Dentist-patient relationship: DP	11	0.93
2. Disease and illness: DI	5	0.90
3. Integrated care: IC	6	0.95
4. Communication: CO	6	0.92
5. Share information and decision-making: SD	5	0.91
6. Holistic: HO	5	0.92
7. Empathy and anxiety management: EAM	4	0.93
Overall	42	0.93

2.1.3.2. Test-rest reliability analysis

To assess the stability of the scale, test-retest reliability was employed with a one-week interval between tests to measure the degree of correlation between the

two sets of scores. The findings demonstrated that the intraclass correlation coefficient of the PCCDS-P version was .90 (p<.01), indicating an excellent relationship between the scores as seen in Table 28.

Table 28 Intraclass Correlation Coefficient of PCCDS-P version

		95% Confidence Interval		F Test with True Value 0			
	Intraclass Correlation[b]	Lower Bound	Upper Bound	Value	df1	df2	Sig
Single Measures	.902[a]	.764	.941	15.685	32	32	.000

Two-way mixed effects model where people effects are random and measures effects are fixed.

a. The estimator is the same, whether the interaction effect is present or not.

b. Type A intraclass correlation coefficients using an absolute agreement definition.

2.1.4. Test the effects of personal attributes of dentist to the level of patient-centered care of dentist: a multiple regression analysis.

We conducted a multiple regression analysis to examine the relationship between patient perception of PCC of dentist in primary care and several independent variables, including age, gender, hospital size, education, insurance type, dental visits within 24 months. Prior to conducting the analysis, descriptive statistics were used to verify that the assumptions of the multiple regression analysis were satisfied. Several procedures were performed and documented in Appendix G to assess the required assumptions.

The overall model was significant (F = 2.394, p =0.011), indicating that the independent variables together accounted for a significant amount of the variance in patient

perception of PCC of dentist. The R-squared was 0.018, indicating that 1.8% of the variances in patient perception of PCC of dentist was accounted for by the independent variables in the model as seen in Table 29.

Table 29 MRA model and coefficients of patient perception of PCC of dentist

ANOVA						Model Summary	
Terms	**SS**	**df**	**MS**	**F**	**Sig.**	**R**	**R^2 (adj.R^2)**
Regression	1042.982	9	115.887	2.394	0.011	0.135	0.018
Residual	56006.062	1157	48.406				(0.011)
Total	51049.044	1166					
Regression Coefficients						**Collinearity Statistics**	
IVs	**b**	**SE**	**B**	**t**	**Sig.**	**Tolerance**	**VIF**
(Constant)	41.53	0.949		43.75	0		
gender	-0.811	0.444	-0.054	-1.824	0.068	0.986	1.01
age (year)	-0.008	0.015	-0.018	-0.54	0.589	0.737	1.36
Large hospital	0.999	0.411	0.071	2.431	0.015*	0.984	1.02
3 times and over dental	1.364	0.463	0.092	2.947	0.003*	0.874	1.14
2 times dental visits	0.99	0.571	0.054	1.735	0.083	0.879	1.14
insurance type-SSS	-0.115	0.548	-0.007	-0.21	0.834	0.802	1.25
insurance type-CSMBS	0.486	0.549	0.032	0.885	0.376	0.664	1.51
education-2nd school	0.341	0.626	0.024	0.544	0.586	0.437	2.29
education-bachelore and over	0.432	0.659	0.03	0.655	0.512	0.403	2.48

**Dependent Variable: pcc_patient score

Hospital size was a significant effector of patient perception of PCC of dentist (β = 0.999, $p < 0.015$), indicating that patient of large hospital, increased level of patient perception of PCC of dentist by 0.999 score. Furthermore, the number of dental visits within a 24-month period emerged as a significant predictor of patient perception of PCC of dentist (β = 1.364, $p < 0.003$). This suggests that patients who had more than three dental visits within the specified timeframe experienced an increase in patient perception of PCC of dentist scores by 1.364 points.

On the other hand, gender, education, insurance type, and age did not demonstrate significant predictive power regarding levels of patient perception of patient-centered care from dentists, as indicated in Table 29.

In conclusion, our multiple regression analysis found that patient perception of PCC of dentist level was significantly predicted by large hospital, dental visit over 3 times within 24 months. These results provide valuable insight into the relationship between patient perception of PCC of dentist, and the independent variables included in the model.

2.2. The patient-centered care of dentist scale (PCCDS-D version)

2.2.1. Confirmatory factor analysis of PCCDS-D version

Confirmatory factor analysis was employed to assess the construct validity of the PCCDS-D version. Before conducting the analysis, various assumptions were evaluated and recorded in Appendix F, including univariate normality and multicollinearity. The collected data

consisted of 754 samples, which were randomly assigned for the CFA test, ensuring the appropriateness for further analysis.

In phase 1, a model for patient-centered care of dentists was developed, consisting of 36-itemacross seven constructs (refer to Figure 17). The demographic characteristics of the participants are presented in Table 20 .in EFA.

The initial measurement model of the PCCDS-D version was evaluated for overall fit with the data. The results indicated inadequate fit, as demonstrated by the following indices: $\chi 2$= 142.742, $\chi 2$/df = 10.196, df=14, p<.001, CFI=.925, TLI=.887, RMSEA=.111. These findings suggested that the initial model did not adequately align with the empirical data. Consequently, the model underwent revision and re-evaluation. (As seen in Figure 20)

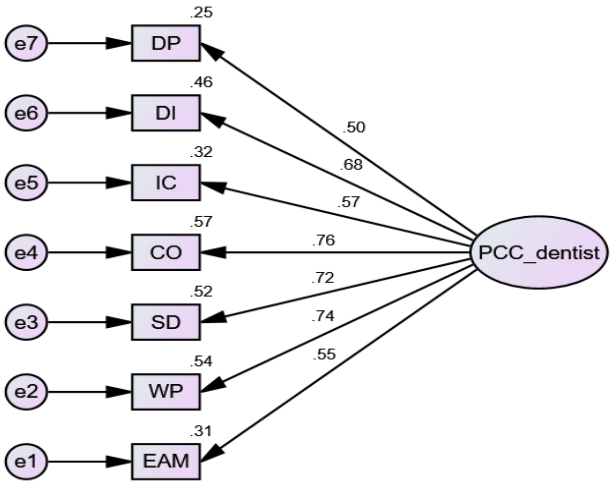

Chi-square = 142.742, Chi-square/df = 10.196, df = 14, p = .000,
GFI = .944, AGFI= .889,CFI = .925, NFI = .918, TLI = .887
RMR = .022, RMSEA = .111

Figure 20 Initial measurement model of PCCDS-D version

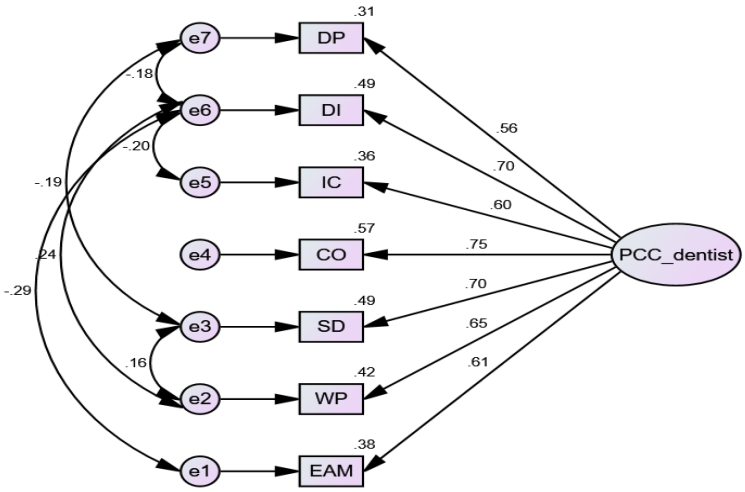

Chi-square = 10.770, Chi-square/df = 1.346, df = 8, p = .215,
GFI = .996, AGFI= .986,CFI = .998, NFI = .994, TLI = .996
RMR = .006, RMSEA = .021

Figure 21 Final measurement model of PCCDS-D version

The final modified CFA model yielded the following fit indices: $\chi 2$= 10.770, $\chi 2$/df = 1.346, df=8, p=.215, CFI=.998, TLI=.996, RMSEA=.021 (refer to Figure 1). The factor loadings were significant, ranging from .56 to .75. The square multiple correlations (R^2) of the components varied from 0.31 to 0.58. The composite reliability (CR) was 0.83, and the average variance extracted (AVE) was .43 (refer to Table 30).

Table 30 Mean, SD, Factor Loading, R^2, AVE, and CR of the PCCDS-D version measurement model.

Component	Mean	SD	Loading	R^2
1. Dentist-patient relationship: DP	4.96	0.76	0.56	0.31
2. Disease and illness: DI	4.37	1.09	0.70	0.49
3. Integrated care: IC	5.44	0.79	0.60	0.36
4. Communication: CO	5.29	0.79	0.75	0.57
5. Share information and decision-making: SD	5.04	0.73	0.70	0.49
6. Holistic: HO	4.35	0.70	0.65	0.42
7. Empathy and anxiety management: EAM	4.77	0.60	0.61	0.38
Construct reliability (CR)	0.83			
Average variance extracted (AVE)	0.43			

The model fit indices: $\chi 2$= 10.770, $\chi 2$/df = 1.346, df=8, p=.215, CFI=.998, TLI=.996, RMSEA=.021

The results indicated that the revised factor structure model aligned well with the empirical data. Furthermore, the observed factor structure in the modified model seemed to

accurately represent the factor structure of the PCCDS-D version construct, as illustrated in the Figure 21.

2.2.2. Measurement invariance: a multigroup analysis

This step aimed to assess the measurement invariance of the PCCDS-D version between two distinct participant groups: large and small community hospitals. The PCCDS-D version is a self-report questionnaire comprising 36 items designed to gauge dentists' patient-centered care in Thailand's primary care settings. The dataset collected for the confirmatory factor analysis (CFA) was divided into the large community hospital group (n=299) and the small community hospital group (n=455). Appendix D displays the geographic distribution of the participants. The demographic characteristics of the participants were as follows: in the large community hospital group, the mean experience was 12.0 (SD = 8.7) years, and 75.9% were female; in the small community hospital group, the mean experience was 11.6 (SD = 8.7) years, and 74.9% were female. As seen in Table 31.

Table 31 Characteristics of the dentist sample in small and large hospitals for multigroup analysis, Total N = 754

Characteristics	n (%)		
	Small hospital (n=455)	**Large hospital (n=299)**	**p-value***
Gender			
Male	114 (25.1)	72 (24.1)	0.76
Female	341 (74.9)	227 (75.9)	
Specialty			
Yes	186 (40.9)	183 (61.2)	0.01**
No	269 (59.1)	116 (38.8)	
Number of dentists Mean 6.07, (2.53)			
1 to 5	321 (70.5)	61 (20.4)	0.01**
6 to 10	133 (29.2)	190 (63.5)	
> 10	1 (0.2)	48 (16.1)	
Number of cases/ day Mean 9.52, (2.64)			
1-10	338 (74.3)	207 (69.2)	0.13
> 10	117 (25.7)	92 (30.8)	
Experience (yrs.) Mean 11.74, (8.80)			
0 to 5	141 (31.0)	93 (31.1)	0.47
6 to 10	102 (24.4)	51 (17.1)	
11 to 15	69 (15.2)	51 (17.1)	
16 to 20	58 (12.7)	42 (14.0)	
> 20	85(89.7)	62 (20.7)	
Rotation to primary care unit			
Never	145 (31.9)	87 (29.1)	0.02**
less than 1 time / month	32 (7.0)	15 (5.0)	
1 time/ month	99 (21.8)	88 (29.4)	
1-2 times/ week	174 (38.2)	99 (33.1)	
3-5 times/ week	5 (1.1)	10 (3.3)	

* Pearson $\chi 2$ test P-value, **P-value <0.05

The initial CFA demonstrated a good fit for the PCCDS-D version in both the large and small community hospitals separately, with all model fit indices meeting the recommended thresholds: large hospital ($\chi 2$ = 7.226, $\chi 2$/df = .803, df = 9, p = .614, CFI = 1.00, RMSEA = .000); small hospital ($\chi 2$ = 6.030, $\chi 2$/df = .603, df = 10, p = .813, CFI = 1.000, RMSEA = .000).

To examine whether the scale exhibited invariance across the two groups, a series of increasingly constrained CFAs were conducted, following the guidelines proposed by Cheung and Rensvold (2002). The following levels of invariance were evaluated: configural, metric, scalar, and residual.

Configural invariance: The results indicated that the factor structure of the PCCDS-D version was equivalent across both large and small community hospitals. The configural invariance model demonstrated an acceptable fit ($\chi 2$= 15.278, $\chi 2$/df = .849, df=18, p=.643, CFI=1.000, RMSEA=.000).

Metric invariance: Furthermore, the metric invariance model, which constrained the factor loadings to be equal across groups, also showed an acceptable fit ($\chi 2$= 16.022, $\chi 2$/df = .668, df=24, p< .887, CFI=1.000, RMSEA=.000, Δ $\chi 2$= .743, Δ df = 6, p=.994, Δ CFI= 0.). These findings suggest that the factor loadings were invariant between large and small community hospitals.

Scalar invariance: Similarly, the scalar invariance model, which constrained the intercepts to be equal across groups, exhibited an adequate fit ($\chi 2$= 16.039, $\chi 2$/df = .642,

df=25, p=.914, CFI=1.00, RMSEA=.000 $\Delta\chi2$= .018, Δ df = 1, p=.895, Δ CFI= 0). This indicates that the intercepts were equivalent across large and small community hospitals.

Residual invariance: Finally, the residual invariance model, which constrained the residual variances to be equal across groups, displayed a satisfactory fit ($\chi2$= 21.086, $\chi2$/df = .570, df=37, p=.983, CFI=1.000, RMSEA=.000, $\Delta\chi2$= 5.047, Δ df = 12, p =.956, Δ CFI= 0), indicating that the residual variances were equal across large and small community hospitals.

Based on the results of the invariance testing, it can be concluded that the PCCDS-D version is invariant across large and small community hospitals up to the level of residual invariance. For further details, please refer to Table 32.

Table 32 CFA models and measurement invariance test of PCCDS-D version model.

Data in model	Model	χ^2	df	P	χ^2/df	RMSEA	CFI	$\Delta\chi^2$	Δ df	P	Δ CFI	Pass/ Fail
Separated	Large hospital (n=299)	7.226	9	.614	.803	<.001	1.000	-	-	-	-	Pass
	Small hospital (n=455)	6.030	10	.813	.603	<.001	1.000	-	-	-	-	
Combined	1.Baseline/ Configural invariance	15.278	18	.643	.849	<.001	1.000	-	-	-	-	Pass
	2.Metric invariance (Weak) (2-1)	16.022	24	.887	.668	<.001	1.000	.743	6	.994	0	Pass
	3.Scalar invariance (Strong) (3-2)	16.039	25	.914	.642	<.001	1.000	.018	1	.895	0	Pass
	4.Residual invariance (Strict) (4-3)	21.086	37	.983	.570	<.001	1.000	5.047	12	.956	0	Pass

2.2.3. Reliability test

In this study, the reliability of the PCCDS-D version was assessed using two methods: internal consistency and test-retest reliability. To determine if all items in the instrument measured the same attribute, the Cronbach's alpha coefficient was employed for internal consistency reliability. Test-retest reliability was used to examine the consistency of the scale over time.

2.2.3.1. Internal consistency

The analysis demonstrated that the overall 36-item PCCDS-D version exhibited a high level of internal consistency, as indicated by a Cronbach's alpha coefficient of .94. This surpasses the commonly accepted threshold of 0.70 for newly developed scales (Nunnally & Bernstein, 1994). When examining the internal consistency of each dimension, the results revealed that the "Dentist-patient relationship," "Disease and illness," "Integrated care," "Communication," "Share information and decision-making," "Holistic," and "Empathy and anxiety management" dimensions had Cronbach's alpha coefficients of .90, .86, .90, .87, .83, .82, and .87, respectively. (Table 33)

Table 33 Internal consistency of PCCDS-D version of 754 dentists' data

Component	Number of Items	Cronbach's alpha reliability
1. Dentist-patient relationship: DP	4	0.90
2. Disease and illness: DI	5	0.86
3. Integrated care: IC	8	0.90
4. Communication: CO	6	0.87
5. Share information and decision-making: SD	4	0.83
6. Holistic: HO	4	0.82
7. Empathy and anxiety management: EAM	5	0.87
Overall	36	0.94

2.2.3.2. Test-rest reliability analysis

To examine the consistency of the scale over time, a test-retest reliability analysis was conducted with a one-week interval between tests. This analysis aimed to measure the extent of correlation between the two sets of scores. The results revealed a significant and strong relationship between the scores, with an intraclass correlation coefficient of .93 ($p < .01$), indicating an excellent level of stability for the PCCDS-D version. (Table 34)

Table 34 Intraclass Correlation Coefficient of PCCDS-D version.

		95% Confidence Interval		F Test with True Value 0			
	Intraclass Correlation[b]	Lower Bound	Upper Bound	Value	df1	df2	Sig
Single Measures	.925[a]	.843	.963	28.634	32	32	.000

Two-way mixed effects model where people effects are random and measures effects are fixed.

a. The estimator is the same, whether the interaction effect is present or not.

b. Type A intraclass correlation coefficients using an absolute agreement definition.

2.2.4. Test the effects of personal attributes of dentist to the level of patient-centered care of dentist: a multiple regression analysis.

To investigate the association between the level of patient-centered care (PCC) of dentists in primary care and various personal independent variables, such as experience (yrs), gender, hospital size, specialty, rotation to primary care unit, number of cases per day, and number of dentists in hospital, a multiple regression analysis was performed.

The overall regression model yielded a significant result ($F = 17.02$ $p < 0.001$), indicating that the collective influence of the independent variables was statistically significant in explaining the variance observed in the level of PCC of dentists. The R-squared value was 1.54, indicating that the independent variables included in the model accounted for 15.4% of the variability in the level of PCC of dentists' scores.

Table 35 MRA model and coefficients of the level of PCC of dentists.

ANOVA						Model Summary	
Terms	**SS**	**df**	**MS**	**F**	**Sig.**	**R**	**R^2 (adj.R^2)**
Regression	1200.006	7	171.429	19.463	0.000	0.393	1.54
Residual	6570.848	746	8.808				(0.146)
Total	7770.854	753					
Regression Coefficients						**Collinearity Statistics**	
IVs	**b**	**SE**	**B**	**t**	**Sig.**	**Tolerance**	**VIF**
(Constant)	27.820	0.361		76.993	0.000		
Gender	-0.176	0.253	-0.024	-0.696	0.487	0.980	1.020
Experience (yrs)	0.025	0.013	0.067	1.919	0.055	0.926	1.080
Rotate 1 time per month	1.966	0.278	0.273	7.067	0.000*	0.758	1.319
Rotate 1-3 time per week	2.863	0.255	0.433	11.224	0.000*	0.761	1.313
Specialty	-0.365	0.230	-0.057	-1.588	0.113	0.887	1.127
Number of cases	-0.025	0.042	-0.021	-0.609	0.543	0.969	1.032
Number of dentists	-0.108	0.056	-0.085	-1.937	0.053	0.587	1.705
Large hospital	0.299	0.288	0.046	1.038	0.300	0.588	1.700

Dependent Variable: pcc_dentist score

The rotation to the primary care unit 1 time per month exhibited a significant effect on the level of PCC of dentists (β = 1.966, $p < 0.001$), indicating that dentists who have rotated to the primary care unit at least one time per month had an increase in the level of PCC of dentists scores by 1.966 points. Furthermore, the rotation to the primary care unit 1-3 times per week exhibited a significant effect on the level of PCC of dentists (β = 2.863, $p < 0.001$), indicating that dentist who has rotated to the primary care unit up to 1-3 times per week had an increase in

the level of PCC of dentists scores by 2.863 points. On the other hand, experience (yrs), gender, hospital size, specialty, number of cases per day, and number of dentists in the hospital, did not demonstrate significant predictive power regarding levels of patient perception of patient-centered care from dentists, as indicated in Table 35.

Our multiple regression analysis revealed that rotation to the primary care unit 1 time per month and 1-3 times per week were significant predictors of dentists' PCC levels. These findings provide valuable insights into the relationship between dentists' PCC levels and the independent variables considered in the model.

The final structure of the scales

Table 36 The structure of PCCDS– P Version.

Component	Number	Item ID in the PCCDS-P version as in Appendix H-2
1. Holistic (HO)	5	1-5
2. Disease and illness (DI)	4	6-9
3. Shared information and decision-making (SD)	5	10-14
4. Dentist – patient relationship (DP)	6	15-20
5. Empathy and anxiety management (EAM)	5	21-25
6. Communication (CO)	6	26-31
7. Integrated care (IC)	11	32-42

Table 37 The structure of PCCDS– D Version.

Component	Number	Item ID in the PCCDS-D version as in Appendix H-2
1. Holistic (HO)	5	1-5
2. Disease and illness (DI)	4	6-9
3. Shared information and decision-making (SD)	4	10-13
4. Dentist – patient relationship (DP)	4	14-17
5. Empathy and anxiety management (EAM)	5	18-22
6. Communication (CO)	6	23-28
7. Integrated care (IC)	8	29-36

Scoring and interpretation of the scales

The purpose of the two scale to measure patient-centered care of dentist were to be evaluated using five distinct rating categories for item format, and the analysis of items involved a procedure that involved summing up the ratings. The overall score is typically treated as an interval scale, similar to the arithmetic mean score, which assumes equal intervals between values (Nunnally & Bernstein, 1994). This means that the two scales are considered as interval scale, commonly used to describe psychological measures as deviations from the mean.

Scoring the scales

Scoring of each item from 1 to 5 (1=rarely, 2=occasionally, 3=sometimes, 4=always, and 5=often). Overall mean score was calculated for the scale.

Interpreting the scales

The class interval was set to 5 classes then class width can calculate with range divided by class interval (5-1/5 = 0.80)(216). The scale overall mean score can interpret as follow:

1.00 – 1.80	means dentist has very low levels of PCC/ patient has very low levels of PCC perception
1.81 – 2.60	means dentist has low levels of PCC/ patient has low levels of PCC perception
2.61 – 3.40	means dentist has moderate levels of PCC/ patient has moderate levels of PCC perception
3.41 – 4.20	means dentist has high levels of PCC/ patient has high levels of PCC perception
4.21 – 5.00	means dentist has very high levels of PCC/ patient has very high levels of PCC perception

Chapter V

Discussion

This chapter focuses on discussing the results in alignment with the study objectives. The four major objectives of this research were 1) to specify the definition and component of patient-centered dental care in primary health care in Thailand. 2) to develop the two patient-centered care of dentist in primary care scales 2.1) the patient perception of patient-centered care of dentist scale (PCCDS-P version) 2.2) patient-centered care of dentist scale (PCCDS-D version) 3) to test the measurement invariance of the two scales and 4) to test the effect of personal attributes of patient and dentist to the level of patient-centered care. In addition, we discuss the two scales relationship. Furthermore, this chapter explores the implications of the findings for dental knowledge and practice. Recommendations for future research are also provided. Finally, the limitations of the study are discussed.

These discussions of the results were written based on the study's objectives as follows.

Objective 1. To specify the definition and component of patient-centered dental care in primary health care of Thailand.

Due to the need for more knowledge about patient/person-centered care in primary dental care, especially in Thailand. We, therefore, commenced with a qualitative study to identify the components related to patient-centered care. As focusing on the clinical encounter skill related to patient-centered attitudes of dentists, the irrelevant attributes such as physical environment,

equipment, organization management, setting, and health system were excluded. The participants in the study, including physicians and dentists, generally agreed on the elements of patient-centered care. However, there were some differences between them. Certain dental experts emphasized the importance of dentists considering patients as equal human beings in every aspect of patient care, similar to a previous study by Apelian et al. (33). Some experts and dentists also highlighted the significance of dentists' self-awareness, similar to the concept of "doctor as a person" in the physician model of patient-centered care proposed by Mead and Bower in 2000 (1). This study focused on the interpersonal skills and management of clinical encounters related to patient-centered attitudes in daily dental practice, excluding irrelevant factors such as the physical environment, equipment, organizational management, location, and health system. Most clinical encounters were communication-related, involving aspects such as establishing a connection, building mutual trust, sharing information, interventions, and nurturing the dentist-patient relationship, as indicated by previous studies. (11, 32, 33, 131).

On the other hand, patient participants highlighted two additional significant findings: easy access to care and pain and anxiety management. Professionals did not initially recognize these perspectives. During the literature review, the researchers did not include "accessibility to care" as a predefined attribute because they associated it solely with system management. However, after analyzing the collected data, the researchers redefined this term to include timely and accessible care, such as short waiting times at dental offices or available appointments for routine treatments, similar to the concepts proposed by Damiano et al. (2019) (26), the patient-

centered dental home model, and Mills (2015)(11). This redefinition acknowledged the shared responsibility between dentists' self-management and system/organization management, allowing dentists to allocate appropriate time for each patient. All patient respondents emphasized the importance of gentle and pain-free treatment, including effective pain and anxiety management. Given that dental procedures can often induce pain and discomfort, it was found that de ntal anxiety was often linked to negative experiences with dental care in the past. Dentists should aim to understand the nature of dental phobia and manage it effectively by starting with a positive patient perspective, consistent with the findings of Kulich et al. (34).

In the present research, the scientists categorized the 12 discoveries into two categories according to their connection to the patient during clinical interactions and their interpersonal abilities. The initial category, known as patient-centered interpersonal care, included eight qualities: communication, holistic approach, empathy, understanding of disease and illness, shared information and decision-making, dentist-patient relationship, and dentist's self-awareness. These elements were closely linked to the dentist-patient relationship and were positioned as the core level of the model. Additionally, these components were acknowledged in different dental care models and medical care models that emphasized patient-centered or person-centered approaches, as proposed by various authors (11, 23, 26, 34, 129). The remaining four elements constituted the second category referred to as patient-centered integrated care. These components encompassed accessible care, comprehensive care, continuous care, and coordinated care. These attributes were essential in primary care and had implications for both interpersonal skills during

clinical interactions and management aspects. Most participants recognized the significance of these attributes and acknowledged that they should not be overlooked when delivering patient-centered dental care within a primary care setting. Dentists working in primary care settings should prioritize ensuring accessibility, integrating preventive measures into their care, scheduling appointments for ongoing care, and fostering effective collaboration with other dentists or healthcare professionals when necessary. The researchers positioned this category as the outer level of the model diagram, acknowledging the interconnectedness of the care process, particularly within primary care. Primary care involves delivering integrated care services by clinicians who establish enduring partnerships with patients and practice within the framework of families and communities (202, 217). These show that there are some relations between primary care function and patient-centered care. Some of the components for patient-centered integrated care were recognized in the model of Mills et al.(11), Damiano et al. (218), and also in nursing care model of McCormack et al. (104), as shown in Figure 22.

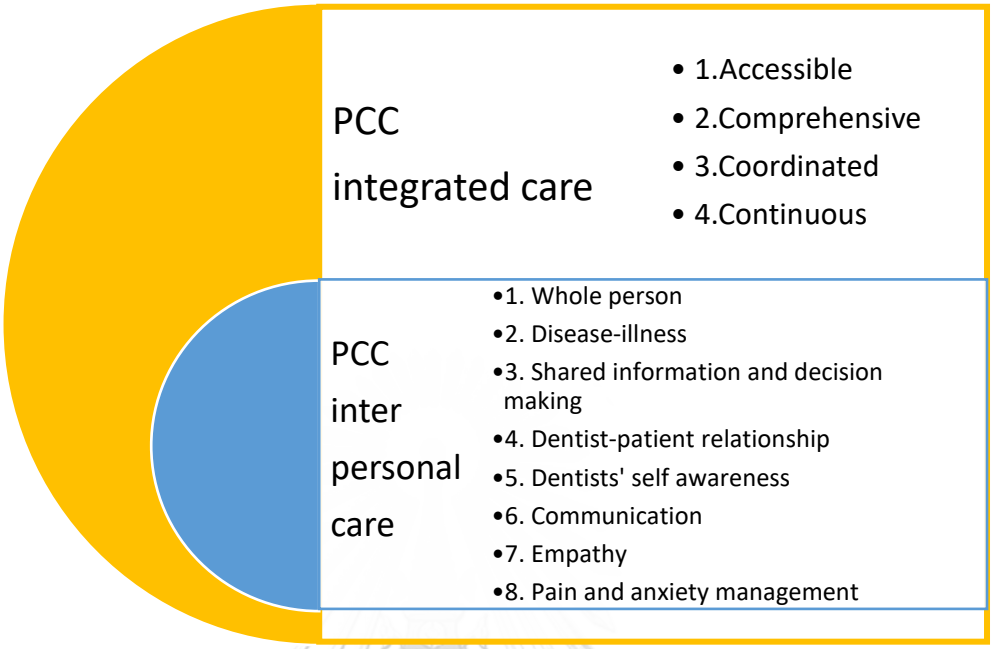

Figure 22 Patient-centered care model from qualitative study.

The examination of patient-centered care encompasses diverse areas of concern, as evidenced by the existing models designed for dentists, medical practitioners, and nurses. Certain studies concentrate on the extent of clinical services rendered during encounters, while others broaden their perspective to encompass the entire healthcare setting, interactions with other healthcare professionals, and the overall structure of the healthcare system.(1, 26, 31, 104, 219). All study participants unanimously agreed that implementing a patient-centered approach would yield benefits and enhance dental healthcare. The proposed conceptual framework aims to provide clarity on this concept, specifically within the primary care context in Thailand. It is acknowledged that fully embracing this multidimensional concept may not be feasible within just a few visits (2-3 visits). Nonetheless, it can serve as a gradual learning process throughout a

dentist's professional journey, progressively guiding them towards adopting a patient-centered approach. It is important to emphasize that being a patient-centered dentist does not necessitate incorporating all components simultaneously. Instead, it entails initiating and nurturing a patient-centered mindset through selected attributes. It is expected that every dentist, particularly those in primary care, should possess this mindset and attitude when interacting with patients. underscores the collaboration between family physicians and allied health professionals in delivering patient-centered care within primary care settings, showcasing Thailand's commitment to primary care reform with the objectives of improving access, enhancing service quality, and reducing costs. To promote the adoption of a patient-centered approach among primary care dentists in Thailand, various avenues can be pursued. Apart from dentists' personal development, primary care facilities should establish policies that foster a supportive environment for patient-centered care practices, such as ensuring the presence of dentists at the sub-district primary care level. It is also crucial to incorporate this concept into dental school curricula.

This study represents the first of its kind in Thailand, proposing a care model based on data obtained from both experts/dentists and patients. However, it is important to acknowledge that there may be limitations due to potential differences in perspectives between dentist and patient participants. Patient participants were selected from diverse age groups and insurance types, ensuring a varied sample with a minimum of two dental visits within the previous 12 months to minimize bias. Further research conducted in different settings and involving diverse participants is necessary to gain a clearer understanding of this construct. The findings of this

study contribute to an improved comprehension of the attributes of patient-centered care in dentistry. By recognizing the significance of these attributes, dental professionals can strive to enhance the quality of care they provide, leading to improved patient satisfaction and outcomes.

Objective 2 To develop the two patient-centered care of dentist in primary care scales 2.1) the patient perception of patient-centered care of dentist scale (PCCDS-P version) 2.2) patient-centered care of dentist scale (PCCDS-D version)

Objective 3 To test the measurement invariance of the two scales.

This section will discuss for the objective 2 and 3 together for each scale separately.

1. Patient-perception of patient-centered care of dentist scale (PCCDS-P version)

To develop the PCCDS-P version the 61 initial pool items were generated based on twelve domains of patient-centered care in primary care dentistry and reviewed relevant existing instruments.

Content validity

Content validity refers to the extent to which an instrument includes an appropriate sample of items that effectively measure the construct of interest (Polit & Beck, 2014) (220). In this study, the PCCDS-P version underwent a rigorous review process by a panel of five experts. Content validity was established by calculating the Content Validity Index (CVI) for both item-level (I-CVI) and scale-level (S-CVI/Ave). The I-CVI scores for the PCCDS-P version items ranged from 60% to 100%, with an overall S-CVI/Ave score of 94.75% indicating, excellent validity(220). Furthermore, a cognitive interviewing process was conducted with a group of five

patients to enhance and evaluate item interpretation and to finalize the structure of the questionnaire. Prior to the main study, a pre-test involving 97 patients was carried out to assess the questionnaire's reliability. Based on the results, 14 items were excluded due to low corrected item-total correlation, ranging from .008 to .345. The preliminary scale, consisting of 45 items, demonstrated high reliability with a Cronbach's alpha coefficient of 0.95. This indicates strong internal consistency and reliability of the scale.(206). These robust procedures further support the content validity of the PCCDS-P version, indicating that the scale includes appropriate items for measuring the targeted construct.

Construct validity

Exploratory factor analysis (EFA)

This present study has two steps to test the construct validity. We started by exploring the underlying factor structure of P-PCCD among patients across primary care settings in Thailand. An Exploratory Factor Analysis (EFA) was conducted to identify patterns of relationships among the 45 items and provide insights into the factors influencing P-PCCD.

The final EFA revealed that a seven-factor 42-item solution was appropriate, as indicated by the scree plot and eigenvalues. These seven factors accounted for a cumulative variance of 76.4%, demonstrating a substantial proportion of the variance explained. The remaining seven components were selected, while the other five pre-specified components were excluded. Nevertheless, it is worth noting that certain items from the dropped components are still present within the seven remaining components. This suggests that patients' interpretations of the

questionnaire were less complex than those presented in the existing literature and expert opinions.

The rotation method used was varimax, which helped simplify the factor structure and enhance interpretability. The rotated solution confirmed the distinctness of the seven factors and facilitated a clearer understanding of their underlying constructs.

The dentist-patient relationship (DP) involves creating a favorable bond between the dentist and their patient, characterized by the dentist's demonstration of mutual respect towards the patient. This interaction builds trust and confidence in the patient, promoting improved dental care and motivating them to actively participate in maintaining their oral health. The essence of this dentist-patient relationship aligns with the concept of a long-term relationship between a dentist, as Scambler S et al. described in 2014 (23) and the building mutual trust of Noushi N et al., in 2020 (32).

The concept of Disease-Illness (DI) refers to the dentist's ability to assess the patient's experience with their illness thoroughly. This includes understanding the patient's perception of the disease, their emotional response to the illness, their impact on their daily life, and their expectations regarding treatment and outcomes. This aligns with the findings of studies conducted by Kulich et al. in 2003 and Apelian et al. in 2014 (33, 34) which emphasized the importance of dentists gaining a comprehensive understanding of both the patient's illness experience and the underlying disease.

Integrated care (IC) comprises four essential elements of primary care: accessibility, continuity, coordination, and comprehensive care. It highlights the dentist's capacity to independently address these aspects without relying solely on the dental office administration (31). This component aligns with the patient-centered dental home model proposed by Damiano et al. between 2015 and 2019, which emphasizes the importance of primary care in dentistry.(26, 218).

The communication component (CO) relates to the dentist's ability to engage in effective and clear communication with patients and their family members. This includes using easily comprehensible language, actively listening, allocating adequate time for communication, and utilizing diverse media to provide clear explanations. These crucial elements were identified in Hunsrisakun's 2010 study, emphasizing their importance in facilitating successful dentist-patient communication. (132), Mills et al.'s 2015 research (11), and Loignon et al.'s 2010 analysis (129).

The empathy and anxiety management component (EAM) incorporates two essential aspects of dental care: compassion and anxiety management. Dentists are expected to demonstrate empathy by understanding the patient's perspective and experiences related to their illness, a quality identified in various models (11, 32, 132). Furthermore, dentists should possess the necessary skills to perform procedures gently, considering the patient's pain sensitivity, and effectively manage dental anxiety or fear, particularly in patients with dental phobia. (34, 131).

The shared information and decision-making (SD) and holistic (HO) components are frequently mentioned in the literature, possibly due to the multiple treatment options available in

dental care for various oral health conditions (11, 23, 32, 34, 131, 132, 218). The importance of shared information and decision-making is emphasized to encourage patient involvement in their dental care. Additionally, dentists should recognize the impact of various factors such as the patient's family context, residential communities, personal beliefs, spirituality, education, religion, ethnicity, occupation, lifestyle, and environment on the treatment plan. This individualized approach to care is consistently highlighted across the reviewed literature (11, 31, 32, 34, 129, 131, 132, 218).

In conclusion, this EFA identified seven factors that contribute to P-PCCD. These findings shed light on the specific areas that impact of P-PCCD within dental services.

Confirmatory factor analysis (CFA)

The CFA was employed to validate the measurement model using empirical data. All CFA model fit indices indicated that the Patient-Perceived Patient-Centered Dental Care Scale (PCCDS-P version) structure was consistent with the empirical data. Additionally, the convergent validity test demonstrated that the scale's constructs are positively correlated. The seven factors identified in this study, namely integrated care (IC), dentist-patient relationship (DP), and communication (CO), align with ten items representing three constructs (accessible and comprehensive care, compassionate care, and health literate care) from the study conducted by Rozier et al. in 2019. Together, these findings confirm that the PCCDS-P version effectively measures patient perception of patient-centered care provided by dentists in primary care settings.(221). Furthermore, our findings unveiled four additional factors: empathy and anxiety

management (EAM), holistic (HO), disease and illness (DI), and shared information and decision-making (SD). These factors could be attributed to the impact of Thai culture, which emphasizes sincerity and respect. Notably, empathy holds great significance in Thai society, reflecting its high value.

Measurement invariance: a multi-group analysis

The initial multi-group analysis showed that the PCCDS-P version's factor structure was equivalent across the large and small community hospitals, supporting the configural invariance model. This suggests that the questionnaire's underlying constructs were similar in both groups. Additionally, the metric invariance model, which constrained the factor loadings to be equal across groups, also provided an acceptable fit. This indicates that the relationships between the observed items and their corresponding latent factors were consistent across the two groups.

However, the scalar invariance model, which constrained the intercepts to be equal across groups, did not fit the data well. This suggests differences in the response patterns or mean levels of the items between the large and small community hospitals. Similarly, the residual invariance model, which constrained the residual variances to be equal across groups, also yielded a poor fit. This indicates that there were differences in the error variances or measurement errors between the two groups. The study of Rozier et al., 2019(221) found weak invariance between English native and Spanish speaking of low-income population.

In summary, the multi-group analysis results provide evidence for the configural and metric invariance of the PCCDS-P version across large and small community hospitals. However,

the findings suggest differences in the intercepts and residual variances, indicating some measurement non-invariance across the two groups. These disparities could be influenced by contextual factors or specific characteristics unique to the hospital setting. For instance, patients in larger hospitals may undergo more specialized dental procedures that require additional visits and time compared to those in smaller hospitals. Additionally, the management of dental offices and patient waiting lists may differ between the two settings. Future research should delve into these variations and explore potential sources of discrepancies to enhance the measurement consistency of the PCCDS-P version across various types of hospitals. Nevertheless, considering the distinctions between small and large community hospitals, the instrument can still be utilized to gauge patient perception of patient-centered care provided by dentists in primary care settings.

Several studies have examined instruments measuring patient satisfaction and quality of dental care from the patient's perspective, some of which overlap with our study(45, 49, 162, 176, 222). However, most of these studies did not ascertain the validity and invariance of the instruments used.

Reliability

Internal Consistency Reliability

The PCCDS-P version was evaluated for internal consistency reliability, which assesses the degree of interrelatedness among the scale items. This was determined by calculating the Cronbach's alpha coefficient, which measures the internal consistency of the items. The results indicated a high level of internal consistency for the PCCDS-P version.

Test-Retest Reliability

Test-retest reliability was assessed to examine the stability and consistency of the PCCDS-P version scores over time. A subgroup of participants completed the PCCDS-P version on two separate occasions with one week interval in between. The intraclass correlation coefficient was computed to determine the degree of correlation between the two sets of scores. The findings demonstrated a strong and significant correlation, indicating high test-retest reliability of the PCCDS-P version.

Overall, the psychometric evaluation of the PCCDS-P version provided evidence of its validity and reliability. The rigorous content validity procedures, including expert rating CVI, concept synthesis and patient cognitive interview ensured that the PCCDS-P version contains relevant and appropriate items for measuring patient perception of patient-centered care of dentist in primary care setting. Furthermore, the strong internal consistency reliability and high test-retest reliability support the stability and consistency of the PCCD-P version scores. In addition, the multi-group analysis results provide evidence for the configural and metric invariance of the PCCDS-P version across the large and small community hospitals by separate interpretation. These findings contribute to the overall robustness and trustworthiness of the PCCDS-P version as a measurement tool for assessing patient perception of patient-centered care of dentist in primary care setting of Thailand.

2 Patient-centered care of dentist scale (PCCDS-D version)

To develop the PCCDS-D version the 66 initial pool items were generated based on twelve domains of patient-centered care in primary care dentistry and reviewed relevant existing instruments.

Content validity

The PCCDS-D version went through a thorough evaluation by a panel of five experts to ensure content validity using the Content Validity Index (CVI). It achieved an impressive overall S-CVI/Ave score of 93.54%, indicating strong validity. Ambiguous and redundant items were eliminated, resulting in a refined scale. Cognitive interviewing involving five dentists was conducted to assess item interpretation. The reliability of the questionnaire was assessed through a pre-test with 65 dentists, revealing a high Cronbach's alpha coefficient of 0.93 for the initial 61-item scale. These procedures solidify the content validity of the PCCDS-D version, ensuring that it contains appropriate items for accurately measuring the intended construct.

Construct validity

<u>Exploratory factor analysis (EFA)</u>

An Exploratory Factor Analysis (EFA) was conducted to uncover patterns and relationships among the 61 items of the PCCDS-D version. The EFA yielded a 36-item solution with seven factors, which accounted for 59.4% of the cumulative variance. The other five pre-specified components were excluded, but some items from these components were still present within the remaining seven factors. This suggests that dentists' interpretation of patient-centered care may be less complex than previous literature and expert opinions. The varimax rotation method was

employed to simplify the factor structure and enhance interpretability. The rotated solution confirmed the distinctiveness of the seven factors, providing a clearer understanding of their underlying constructs.

The primary care concept encompasses Integrated care (IC). Dentists are expected to handle these issues independently, without relying solely on dental office administration. Effective communication (CO) is crucial for dentists to interact with patients and their families. Shared information and decision-making (SD) and holistic care (HO) are frequently mentioned in the literature, likely due to the various treatment options available for oral health conditions. Personalized care is a recurring theme in the reviewed literature. (11, 31, 32, 34, 129, 131, 132, 218). Many domains in the study by Kitreerawutiwong K, Sriruecha C, and Laohasiriwong W, 2015 (223) on primary care managers in Thailand, such as Emotional Intelligent, Professionalism, Communication, share similarities with CO, SD, HO, and EAM components, particularly in terms of management competence.

The dentist-patient relationship (DP) entails establishing a positive and respectful connection between the dentist and the patient, fostering trust and confidence in the patient. This concept is in line with the notion of building mutual trust discussed by Noushi et al. in 2020 (37). The Disease-Illness (DI) component refers to the dentist's comprehensive understanding of the patient's illness experience. This is consistent with the findings of Kulich et al. in 2003 and Apelian et al. in 2014 (32, 35), emphasizing the importance of dentists understanding both the patient's illness and disease experience.

To summarize, the exploratory factor analysis (EFA) revealed seven factors that play a role in patient-centered care in dentistry. These findings provide insights into the specific aspects that influence PCCD in dental services.

Confirmatory factor analysis (CFA)

The CFA results demonstrated that all model fit indices of the PCCDS-D version structure aligned with the empirical data. The convergent validity test also indicated significant correlations among the scale's constructs. This confirms that the seven factors effectively measure dentists' patient-centered care in primary care settings. Four components of our study, namely shared information and decision-making (SD), dentist-patient relationship (DP), empathy and anxiety management (EAM), and holistic (HO), align with three constructs identified as sharing information, compassionate interaction, and respect in a study conducted by Soyeung Shin and Jiyeon Kang in 2019, specifically focusing on operating room nurses(201). In addition, our results revealed others constructs which similar to eight elements of patient-centered care of the Picker institute (116).

Measurement invariance: a multi-group analysis

The initial multi-group analysis results indicated that the factor structure of the Patient-Centered Care of Dentist Scale (PCCDS-D version) was consistent across large and small community hospitals, supporting the configural invariance model. This suggests that the underlying constructs measured by the questionnaire were similar in both groups. Moreover, the metric invariance model, which constrained the factor loadings to be equal across groups,

demonstrated an acceptable fit. This indicates that the relationships between the observed items and their corresponding latent factors were consistent across the two groups. Additionally, the scalar invariance model, which constrained the intercepts to be equal across groups, provided a good fit to the data. This suggests no differences in the items' response patterns or mean levels between the large and small community hospitals. Similarly, the residual invariance model also showed an excellent fit, which constrained the residual variances to be equal across groups. This indicates that the measurement errors or variations in the observed items were equal between the two groups. In summary, the multi-group analysis results support the error invariance of the PCCDS-D version across large and small community hospitals. This instrument can measure patient-centered care among dentists in primary care settings. Several studies have explored instruments for assessing patient-centered care in dentistry, including aspects such as the doctor-patient relationship, empathy, communication, and a holistic approach (49, 162, 175, 176, 224-226). Some of these studies share common questions with our research. However, most of these studies have not extensively examined the validity and invariance of the instruments.

Reliability

Internal Consistency Reliability:

The PCCDS-D version was evaluated for internal consistency reliability, which assesses the degree of interrelatedness among the scale items. This was determined by calculating the Cronbach's alpha coefficient, which measures the internal consistency of the items. The results indicated a high level of internal consistency for the PCCDS-D version.

Test-Retest Reliability:

A subgroup of participants completed the PCCDS-D version on two separate occasions with one week interval in between. The intraclass correlation coefficient was computed to determine the degree of correlation between the two sets of scores. The findings demonstrated a strong and significant correlation, indicating high test-retest reliability of the PCCDS-D version.

The psychometric evaluation of the Patient-Centered Care of Dentist Scale (PCCDS-D version) yielded compelling evidence of its validity and reliability. Through rigorous content validity procedures, including expert rating CVI, concept synthesis, and dentist cognitive interviews, the PCCDS-D version was ensured to contain relevant and appropriate items for measuring patient-centered care among dentists in a primary care setting. Furthermore, the PCCDS-D version demonstrated strong internal consistency reliability and high test-retest reliability, indicating the stability and consistency of the scores over time. Additionally, the multi-group analysis results provided evidence for the residual invariance of the PCCDS-D version across large and small community hospitals.

These findings collectively enhance the overall robustness and trustworthiness of the PCCDS-D version as a reliable measurement tool for assessing patient-centered care among dentists in the primary care setting of Thailand.

Objective 4. To test the effect of personal attributes of patient and dentist to the level of patient-centered care.

2.1.1 Effect of patient personal attributes to the patient perception of patient-centered care of dentist (PCCDS-P version)

This study did not find a significant association between the type of dental insurance a patient had and their perception of patient-centered care of dentist. This finding differs from the study conducted by Aungsumalee Pholpark in 2012 (192), which examined responsiveness under different health insurance schemes and hospital types, as well as the study by Tippawan Liabsuetrakul et al. in 2012 (193), which assessed the perception of women who gave birth in a hospital regarding health system responsiveness and satisfaction.

The lack of influence of insurance type on patient perception of patient-centered care of dentist in our study may be attributed to the small number of patients with Social Security System (SSS) insurance. This limited sample size might be because SSS patients often find it challenging to take leave from work during regular working hours to receive dental services.

It is important to note that responsiveness, in the context of this study, is more closely related to the management and structure of care rather than patient-centered care.

However, the results from both studies were consistent when examining different types or sizes of hospitals. The observed differences can be attributed to the diversity in patient characteristics among various hospital types. It is likely that larger hospitals provide a wider range of specialized dental procedures, resulting in a higher number of visits and longer treatment durations. As a result, there may be variations in queue management and patient flow between hospitals of different sizes.

Our findings indicate that the number of dental visits has an impact on patient perception of patient-centered care of dentist. This could be due to the nature of certain dental procedures that require multiple visits, such as prosthetics or root canal treatments. The extended treatment duration provides an opportunity for patients and dental professionals to establish a stronger rapport and build a positive dentist-patient relationship.

2.1.2 Effect of dentists' personal attributes to the patient-centered care of dentists (PCCDS-D version).

Our research findings demonstrated that the frequency of dentists rotating to provide services at primary care units or sub-district healthcare centers has a significant influence on the provision of patient-centered care by dentists. Different from the study of Lee, M., Song, Y., You, M. et al. in 2023, in 217 Korean dentists (225), they found work year, academic track and empathy are the predictor of patient-centered approach. The reason behind this could be the flexibility for dentists working at community hospitals to rotate and provide services at the sub-district level, where they encounter diverse workplace environments. These settings often offer a friendly and relaxed working atmosphere, allowing dentists to be in close proximity to people, patients, and villagers within a small patient group who frequently seek treatment. The inherent nature of this primary health system contributes to the development of dentists' capacity to deliver patient-centered services.

Primary care settings often prioritize accessibility and affordability of care. Dentists in these settings may be more inclined to adopt a patient-centered approach to accommodate patients

from diverse backgrounds, with varying levels of oral health literacy and resources. They may focus on effective communication, clear explanations, and shared decision-making to ensure patients have a voice in their care. Dentists in primary care often serve a specific community or population. They understand the unique needs, cultural factors, and social determinants of health that may impact their patients' oral health outcomes. This understanding allows dentists to tailor their care and communication to meet the specific needs of the community they serve, promoting patient-centeredness. (223, 227)

The discussion of the two scales

This study was the first on this topic to propose a care model by gathering data both from the experts/dentists and patients in Thailand and the first study to develop the two scales. After analyzing the components of each questionnaire, we found that the PCCDS-P version consists of 5-7 components, while the PCCDS-D version tends to have 6-9 components. However, after determining the appropriate and interpretable components for all the questions, we found that both questionnaires have the same number of components, which is seven. The difference lies in the number of questions. The shared components in both questionnaires indicate that the perspectives of both dentists and patients in primary care services are not significantly different.

The final seven components definition show as follow:

1. Holistic (HO)

Dentists must consider the holistic well-being of patients, including their mental and physical health, preferences, values, and family dynamics. They should also account for factors such as residential community, education, religion, ethnicity, occupation, and lifestyle . This comprehensive approach acknowledges the broader societal and cultural influences on patients' lives. By gathering relevant information, dentists can customize care plans to meet each patient's individual needs.

2. Disease and illness (DI)

Dentists can assess the patient's overall well-being, including their health understanding, current health status, illness progression, and past experiences with illness. They can also explore the patient's perception of their condition, emotional response, and the impact of the illness on various aspects of their life. Additionally, dentists can evaluate the patient's treatment expectations and anticipated health outcomes.

3. Shared information and decision-making (SD)

After gathering information about the diagnosis, dentists work with the patient and their family to assess the importance of the issues and set goals. This includes providing relevant information about the treatment plan, options, benefits, drawbacks, and costs. Dentists should empower patients to actively participate in decision-making throughout the treatment process. They should create a supportive environment where patients feel at ease asking questions until they fully understand the treatment plans and available choices.

4. Dentist-patient relationship (DP)

Building a positive connection between the dentist and patient is beneficial for delivering high-quality care and promoting the patient's engagement in self-care. Dentists should exhibit values of equality, honesty, respect for individual differences, patient rights, and confidentiality. It is important to maintain a balanced and respectful dentist-patient relationship that upholds personal boundaries and cultivates mutual trust.

5. Empathy and anxiety management (EAM)

Dentists should empathize with patients' emotions and understand their perspective on illness or oral health issues, providing compassionate care. They must prioritize patient comfort, considering pain sensitivity and addressing dental fear or anxiety through effective pain management and anxiety-reducing strategies during procedures. Dentists' skillful management of these aspects ensures a positive and comfortable patient experience.

6. Communication (CO)

Dentists should possess strong communication skills when engaging with patients and their relatives. This includes providing a warm greeting and introduction, using clear and understandable language, actively listening, allocating adequate time, and employing effective verbal and non-verbal communication techniques. Utilizing different communication mediums for explanations can also be advantageous. Additionally, dentists should assess and confirm the patient's comprehension during the consultation to ensure effective communication.

7. Integrated care (IC) including four functions of primary care

7.1 Accessible: Dentists are responsible for ensuring efficient and convenient delivery of dental services tailored to each patient's needs. This involves prioritizing punctuality, facilitating appointment rescheduling, and providing accessible assistance when needed.

7.2 Comprehensive

Dentists should be proficient in providing comprehensive dental care, including primary treatments, preventive measures, and oral health promotion, to maintain overall oral well-being.

7.3 Coordinated

Dentists have a vital role in facilitating coordination among patients, colleagues, and staff within and across dental offices. They collaborate with dental assistants, department staff, and personnel from other healthcare units to ensure patient-centered care and prioritize the health and well-being of patients.

7.4 Continuous

The responsible dentist ensures the ongoing continuity of treatment, particularly for procedures requiring continuous care, such as managing periodontitis or providing follow-up after denture placement. This includes scheduling regular follow-up appointments to maintain oral health and ensuring the smooth transfer of information and records when patients are referred between different dentists or services.

Among these components, integrated care (IC) is the most clearly defined component that is fundamental to primary healthcare services. It encompasses the foundational aspects of healthcare delivery at the primary care level including accessible, continuous, comprehensive and

coordinated. While some of patient-centered model separate these subcomponents as main component of their models such as the eight dimension of patient-centered care model of the Picker institute: (a) respect for patient preferences, values and expressed needs; (b) information, education and communication; (c) coordination and integration of care and services; (d) emotional support; (e) physical comfort; (f) involvement of family and friends; (g) continuity and transition; and (h) access to care and service.(116, 117) In addition to Integrated care (IC), Dentist-patient relationship (DP), and Communication (CO), hold the highest factor loading in the PCCDS-P version Measurement model. In the PCCDS-D version Measurement model, the highest weights, in descending order, are Communication (CO), Disease-Illness (DI), and Shared Information and Decision Making (SD). It can be observed that the communication between dentists and patients is highly weighted in the PCCDS-D version Measurement model, indicating its significant importance from both perspectives of dentists and patients. Both patients and dentists highly value effective communication in providing dental care services. Dentists also promote patient participation in decision-making by sharing necessary information to facilitate informed choices regarding treatment options. This may be because dental care services often offer multiple treatment alternatives, and therefore, dentists are accustomed to presenting options to patients as a regular practice. In addition to placing importance on communication, dental patients in primary care settings also emphasize the significance of having a good relationship between dentists and patients.

The findings from this study highlight the importance of patient-centered care from both the perspective of dentists and patients, particularly in terms of primary care function. This is evident in emphasizing integrated care, effective communication, complete information provision for shared decision-making, and fostering a good relationship between dentists and patients. Utilizing the tool developed from this research can help identify areas for further development in primary care dentistry to enhance dentists' capabilities in delivering patient-centered care. This, in turn, can lead to high-quality healthcare services and ultimately contribute to better health outcomes.

However, the empirical literature primarily focuses on survey instruments to measure patient/person-centered care, but there needs to be more triangulation of data from different sources. Surveys may have issues, such as doubts about credibility, low response rates, limited detail, and failure to address important issues. Surveys may not capture demographic or socioeconomic differences and may be biased toward well-educated individuals. Validated surveys may need to include important attributes of person-centered care. Comparisons between surveys and patient narratives show different priorities for improvement, with surveys lacking the necessary detail. Surveys can serve as screening tools, but in-depth qualitative interviews are recommended to capture the multifaceted nature of patient experience. (14)

Implication for dental public health knowledge

Primary care dentists must adopt a patient-centered approach for several reasons. Firstly, patient-centered care improves patient satisfaction and engagement in their oral health. By

involving patients in decision-making, considering their preferences, and addressing their individual needs, dentists can enhance the overall patient experience.

Secondly, patient-centered care promotes better oral health outcomes. Dentists can tailor treatment plans and preventive strategies When they understand patients' unique circumstances, values, and beliefs. This personalized approach increases treatment adherence and effectiveness, improving oral health outcomes.

Additionally, patient-centered care strengthens the dentist-patient relationship. Dentists can establish a strong rapport with their patients by fostering trust, respect, and open communication. This relationship promotes effective collaboration, encourages patients to share relevant information, and enhances treatment outcomes.

Furthermore, patient-centered care aligns with the principles of comprehensive primary care. Dentists in primary care settings often have a longitudinal relationship with patients, allowing them to consider patients' overall health and well-being. By considering systemic conditions, lifestyle factors, and social determinants of health, dentists can provide holistic care that integrates oral health into overall health management.

Adopting a patient-centered approach in primary care dentistry is essential for improving patient satisfaction, oral health outcomes, and the dentist-patient relationship while aligning with the principles of comprehensive primary care.

This study made a pioneering contribution by introducing a patient-centered care of dentist model in primary care settings in Thailand. It achieved this by collecting data from both

dental experts and patients. Furthermore, two newly developed scales were successfully established to assess the patient-centered care of dentists in primary care, ensuring their reliability and validity.

Implication for dental practice

1. It is highly recommended that all dentists embrace a patient-centered care approach, as it has the potential to enhance both patient satisfaction and oral health outcomes.
2. Primary care dentists should actively seek additional training opportunities in patient-centered care, whether through short courses or comprehensive programs such as family dentistry, primary care dentistry, or advanced general dentistry. It is also important to regularly reinforce this principle by organizing knowledge-sharing meetings, case study sessions, and similar activities to keep dentists reminded and updated on patient-centered care practices.

Implication for dental care service system

The transfer of state-owned primary healthcare facilities to local authorities can have positive effects on primary dental care services in Thailand. It can create convenient access to dental care services that are better aligned with the needs of the local population. Moreover, it can enhance the expertise and knowledge of local dental professionals, leading to higher quality

dental services. However, it is crucial to establish collaboration and coordination between local authorities and the central government to build an efficient dental care system throughout the country. This study shows that there are some benefits and implications.

2.1.2.1 In terms of feasibility, it is advisable for the Ministry of Public Health and local administration, such as the Provincial Administrative Office, to enforce the collaboration between dentists and dental nurses, as well as interdisciplinary professionals, within primary care teams at the sub-district level.

2.1.2.2 The Ministry of Public Health and local administration, such as the Provincial Administrative Office, should establish a policy that encourages dentists to actively engage with dental nurses and members of multidisciplinary teams in primary care settings at the sub-district level.

2.1.2.3 The incorporation of this concept into all undergraduate dental courses is highly recommended, particularly by integrating it into the clinical training curriculum, ideally within the comprehensive clinical training section.

Recommendation for future research

Future research directions could include the following:

1. Evaluate the reliability and validity of these instruments in diverse healthcare settings such as private clinics, specialty dental care settings, and general hospitals, both for the dentist and patient scales.

2. Investigate the correlation between the levels of patient-centered care measured by both instruments within the same dentist-patient dyad.

3. Develop a concise short-form inventory for both instruments, aiming to provide a more efficient and streamlined assessment tool.

Limitation of this study

The present study possesses several limitations. Firstly, although the authors diligently incorporated initial items based on literature reviews and in-depth interviews with experts and patients in public primary care, there remains a possibility that certain dimensions of patient-centered dental care, specifically from the patient's perspective, were not entirely encompassed. Secondly, the sample exclusively comprised patients and dentists from community hospitals, thereby restricting the generalizability of findings to other settings. Furthermore, the study relied on self-reported measures, which can potentially introduce common method bias.

Chapter VI

Conclusion

The primary objective of this study was to establish a conceptual framework and create two measurement scales to assess patient-centered dental care in primary care settings in Thailand, considering both patient and dentist perspectives. The process of developing these scales involved a systematic approach comprising nine steps: 1) conducting literature reviews, 2) conducting in-depth interviews, 3) assessing content validity, 4) performing a pre-test, 5) conducting a survey, 6) conducting confirmatory factor analysis, 7) testing for invariance, 8) examining the impact of personal attributes, and 9) assessing reliability.

In the primary care setting of Thailand, patient-centered care of dentists encompasses seven key elements: 1) Integrated Care (IC), 2) Holistic (HO), 3) Communication (CO), 4) Dentist-Patient relationship (DP), 5) Empathy and Anxiety management (EAM), 6) Shared information and decision-making (SD), and 7) Disease and Illness (DI).

The PCCDS-P version is a patient self-report questionnaire comprising 42-itemthat evaluate seven distinct constructs: Integrated Care (IC) with 11 items, Holistic (HO) with 5 items, Communication (CO) with 6 items, Dentist-Patient relationship (DP) with 6 items, Empathy and Anxiety management (EAM) with 5 items, Shared information and decision-making (SD) with 5 items, and Disease and Illness (DI) with 4 items as seen in Appendix H-1. The scale adopts a ratio-scale format and offers five response options: 1=rarely, 2=occasionally, 3=sometimes,

4=always, and 5=often. Overall, the PCCDS-P version demonstrates satisfactory levels of content validity, construct validity, and reliability. It also indicates the presence of metric invariance between patients in large hospitals and small hospitals.

The PCCDS-D version is a self-administered questionnaire specifically developed for dentists in primary care. It comprises 36-itemthat evaluate seven distinct constructs: Integrated Care (IC) with 8 items, Holistic (HO) with 4 items, Communication (CO) with 6 items, Dentist-Patient relationship (DP) with 4 items, Empathy and Anxiety management (EAM) with 5 items, Shared information and decision-making (SD) with 4 items, and Disease and Illness (DI) with 5 items as seen in Appendix H-2. The scale utilizes a ratio-scale format, providing respondents with five response options: 1=rarely, 2=occasionally, 3=sometimes, 4=always, and 5=often. In summary, the PCCDS-D version demonstrates satisfactory levels of content validity, construct validity, and reliability. Furthermore, it indicates strict invariance among dentists employed in both large hospitals and small hospitals.

The presence of a notable factor that can significantly impact patient-centered care of dentists is the regular rotation of dentists to work in primary care units, preferably at least once a month.

Two significant indicators that can influence patient perception of patient-centered care of dentists are the size of the community hospital and the frequency of dental visits, specifically patients who have had three or more dental visits within a 24-month period.

REFERENCES

1. Mead N, Bower P. Patient-centredness: A conceptual framework and review of the empirical literature. Social Science and Medicine2000. p. 1087-110.

2. Patient-Centered Pharmacy Home The Compliance Team; [Available from: https://thecomplianceteam.org/our-accreditation-programs/pharmacy/patient-centered-pharmacy-home/.

3. Lewis N, Shimp L, Rockafellow S, Tingen J, Choe HM, Marcelino M. The role of the pharmacist in patient-centered medical home practices: current perspectives. Integr pharm res pract. 2014;3:29.

4. Sánchez AM. Teaching patient-centered care to pharmacy students. International Journal of Clinical Pharmacy. 2011;33:55-7.

5. Kittelson AJ, Hoogeboom TJ, Schenkman M, Stevens-Lapsley JE, Van Meeteren NLU. Person-Centered Care and Physical Therapy: A "people-Like-Me" Approach. Physical Therapy. 2020;100:99-106.

6. Cheng L, Leon V, Liang A, Reiher C, Roberts D, Feldthusen C, et al. Patient-centered care in physical therapy: definition, operationalization, and outcome measures. Physical Therapy Reviews. 2016;21:109-23.

7. Stewart MA. Effective physician-patient communication and health outcomes: A review. Cmaj. 1995;152:1423-33.

8. Flagg AJ. The role of patient-centered care in nursing. Nursing Clinics of North America. 2015;50:75-86.

9. Hughes JC, Bamford C, May C. Types of centredness in health care: Themes and concepts. Medicine, Health Care and Philosophy: Med Health Care Philos; 2008. p. 455-63.

10. Mills IJ. A person-centred Approach to holistic Assessment. Primary dental journal. 2017;6:18-23.

11. Mills I, Frost J, Kay E, Moles DR. Person-centred care in dentistry - The patients' perspective. Br Dent J. 2015;218:407-13.

12. Mills I, Frost J, Cooper C, Moles DR, Kay E. Patient-centred care in general dental practice - a systematic review of the literature. BMC Oral Health. 2014;14:64.

13. Balint E. The possibilities of patient-centered medicine. Journal of the Royal College of General Practitioners. 1969;17:269-76.

14. Silva D, editor Helping measure person centred care: a review of evidence about commonly used approaches and tools used to help measure person-centred care. The Health Foundation; 2014; London.

15. Nolte E, Merkur S, Anell A. Person-centredness: exploring its evolution and meaning in the health system context. Achieving Person-Centred Health Systems: Cambridge University Press; 2020. p. 19-40.

16. Levinson W, Lesser CS, Epstein RM. Developing physician communication skills for patient-centered care. Health Affairs. 2010;29:1310-8.

17. Smith S. Dealing with the difficult patient. Postgraduate Medical Journal. 1995;71:653-7.

18. Hottel TL, Hardigan PC. Improvement in the Interpersonal Communication Skills of Dental Students. Journal of Dental Education. 2005;69:281-4.

19. Buduneli N. Communication Skills of the Clinician and Patient Motivation in Dental Practice. Current Oral Health Reports. 2020;7:202-7.

20. WHO. WORLD HEALTH ORGANIZATION FIFTY-THIRD WORLD HEALTH ASSEMBLY. The world health report 2000 MESSAGE FROM THE DIRECTOR-GENERAL. 2000.

21. De Silva A, editor A Framework For Measuring Responsiveness. World Health Organisation; 2000.

22. Institute of Medicine. Crossing the Quality Chasm: A New Health System for the 21st Century. Washington (DC): National Academies Press; 2001. 360 p.

23. Scambler S, Asimakopoulou K. A model of patient-centred care-turning good care into patient-centred care. Br Dent J. 2014;217:225-8.

24. Paparella G. Person-centred care in Europe: a cross-country comparison of health system performance, strategies and structures Policy briefing Picker Institute Europe. 2016.

25. Damiano PC, Reynolds JC, Herndon JB, Mckernan SC, Professor A, Kuthy RA, editors. Patient-Centered Dental Home Development Project: Phase 1 Study Methodology2016.

26. Damiano PC, Reynolds JC, Mckernan SC. The need for defining a patient-centered dental home model in the era of the Affordable Care Act Background Report. The University of Iowa Health Policy center. 2015;8:1-32.

27. The Australian Commission on Safety and Quality in Health care. Patient-centred care improving quality and safety by focusing care on patients and consumers. 2010.

28. Smiley CJ. The Importance of Patient-Centered Care ADA - DQA.

29. Damiano PC, Reynolds JC, Herndon JB. Patient-Centered Dental Home (PCDH) Project, Phase 3-4: Scan of Quality Indicators and Development of Proposed Measure Concepts. 2018.

30. Department of Health. The health and personal social services programmes: Departmental report. 2005.

31. Lee H, Chalmers NI, Brow A, Boynes S, Monopoli M, Doherty M, et al. Person-centered care model in dentistry. BMC Oral Health. 2018;18.

32. Noushi N, Bedos C. Developing person-centred dental care: The perspectives of people living in poverty. Dent J. 2020;8.

33. Apelian N, Vergnes J-N, Bedos C. Humanizing clinical dentistry through a person-centred model. Int J Whole Pers Care. 2014;1:30-50.

34. Kulich KR, Berggren U, Hallberg LRM. A Qualitative Analysis of Patient-Centered Dentistry in Consultations with Dental Phobic Patients. Journal of Health Communication2003. p. 171-87.

35. American dental Education Association. ADEA Competencies for the New General Dentist. Journal of Dental Education. 2016;80:825-8.

36. Utasri T. The Study of Dental Ethics Lawsuits Prosecution of The Dental Council of Thailand 2002-2019. 2019.

37. Marei HF. Medical litigation in oral surgery practice: Lessons learned from 20 lawsuits. J Forensic Leg Med. 2013;20:223-5.

38. Newsome PRH, Wright GH. A review of patient satisfaction: 2. Dental patient satisfaction: an appraisal of recent literature. Br Dent J. 1999;186:166-70.

39. Narang R, Mittal L, Saha S, Aggarwal V, Sood P, Mehra S. Empathy among dental students: A systematic review of literature. J Indian Soc Pedod Prev Dent. 2019;37:316-26.

40. Babar MG, Omar H, Lim LP, Khan SA, Mitha S, Ahmad SFB, et al. An assessment of dental students' empathy levels in Malaysia. International Journal of Medical Education. 2013;4:223-9.

41. Prabhu S, Prasanth S, Kishore S, Kumar V. Standing in patients′ shoes — survey on empathy among dental students in India. Journal of Education and Ethics in Dentistry: Medknow; 2014. p. 69.

42. Kalyan V, Manjula S, Padma T, Pratap KVNR, Vineela P, Varma S. Assessment of empathy among clinical dental students in a teaching dental institution in Telangana State, India. Journal of Indian Association of Public Health Dentistry. 2017;15:162.

43. Jeffrey J. Sherman PDAC, B.S. Measurement of Changes in Empathy During Dental School. Yearbook of Dentistry. 2005;69(3):338-45.

44. Datta G, N V, Nayak SS, Bullappa D, N N, Lakshmikantha R, et al. Measuring Empathy Towards Patients among Dental Under Graduate Students of Bangalore City-A Cross Sectional Study. International Journal of Medicine and Public Health. 2016;6:113-6.

45. Finance Commercial and NHS Directorate. Dental Quality and Outcomes Framework for 2016-17. In: Department of Health, editor. 2016.

46. Agency for Healthcare Research and Quality. Consumer Assessment of Healthcare Providers and Systems (CAHPS) ® Dental Plan Survey. 2009.

47. Jasser RA. Evaluation of the Practice of Patient Centered Care among Saudi Dentists in Central Region of Saudi Arabia: A Cross-sectional Study. Journal of Research in Medical and Dental Science. 2020;8:05-10.

48. Corah NL, O'Shea RM, Bissell GD. The dentist-patient relationship: mutual perceptions and behaviors. Journal of the American Dental Association (1939). 1986;113:253-5.

49. Hakeberg M, Heidari E, Norinder M, Berggren U. A Swedish version of the Dental Visit Satisfaction Scale. Acta Odontologica Scandinavica: Taylor and Francis A.S.; 2000. p. 19-24.

50. Song YH, Luzzi L, Chrisopoulos S, Brennan D. Dentist-patient relationships and oral health impact in Australian adults. Community Dentistry and Oral Epidemiology. 2020;48:309-16.

51. Pongsupap Y. Family Medicine and Community Orientation as a New Approach to Quality Primary and Person-centered Care in Thailand. International Journal of Person Centered Medicine. 2014;3:243-7.

52. Longtin Y, Sax H, Leape LL, Sheridan SE, Donaldson L, Pittet D. Patient participation: Current knowledge and applicability to patient safety. Mayo Clinic Proceedings. 2010;85:53-62.

53. Moore L, Britten N, Lydahl D, Naldemirci Ö, Elam M, Wolf A. Barriers and facilitators to the implementation of person-centred care in different healthcare contexts. Scandinavian Journal of Caring Sciences. 2017;31:662-73.

54. Esmaeili M, Ali Cheraghi M, Salsali M. Barriers to patient-centered care: A thematic analysis study. International Journal of Nursing Knowledge. 2014;25:2-8.

55. Griffiths AW, Kelley R, Garrod L, Perfect D, Robinson O, Shoesmith E, et al. Barriers and facilitators to implementing dementia care mapping in care homes: Results from the DCM™ EPIC trial process evaluation. BMC Geriatrics. 2019;19:37.

56. Wongchaiya P, Ampansirirat A, Pinjai P. Patient-Centered Care: Health Care Services for the 21st Century. The Southern College Network Journal of Nursing and Public Health. 2017;4:s367-s71.

57. The Royal Gazette of Thailand. Constitution of The kingdom of Thailand 2560 B.E. 2018.

58. The Royal Gazette of Thailand. Primary care act B.E.2562. Thailand 2019.

59. Faculty of dentistry; Naresuan University. Doctor of Dental Surgery Program B.E.2559.. 2012.

60. Faculty of dentistry; Chulalongkorn University. Doctor of Dental Surgery Program B.E.2559.2016.

61. Faculty of dentistry; Prince of Songkla University. Doctor of Dental Surgery Program B.E.2561.2018.

62. Owittayakul D, PS, Atisak Chuengpattanawadee. Concepts of Health and Humanized Health Care in Comprehensive Dental Care. Chaingmai Dental Joural. 2017.

63. Chuengpattanawadee A. Humanized Dentistry. J Dent Assoc Thai. 2009;59(1):63-73.

64. Subcommittee on Family Dentistry Education and Development. Taskforce Report: Family dentistry. The Royal college of Dental sugeons of Thailand; 2562.

65. Piyatragoolrate B. Comprehensive dental care: A case report. Konkaen Dental Journal. 2011;14(2):12.

66. Ministry of Public Health. Guidelines for Family Doctor Clinic Operations for Service Units 2018.

67. Oral Health Service Plan Board, Health Region 7. Roles of Dental Personnel in Family Doctor Clinic (PCC) and Assessment Guidelines in Health Region 7. 2561.

68. Bloch-Jorgensen ZT, Cilione PJ, Yeung WWH, Gatt JM. Centeredness Theory: Understanding and Measuring Well-Being Across Core Life Domains. Front Psychol. 2018;9:610.

69. Chan M. Primary health care: Now more than ever. UN Chronicle2012. p. 4-7.

70. Michael J L. Defining primary dental care. J Public Health Dent. 1978;38(3).

71. Vandenberg RJ, Lance CE. A Review and Synthesis of the Measurement Invariance Literature: Suggestions, Practices, and Recommendations for Organizational Research. Organizational Research Methods: SAGE Publications Inc.; 2000. p. 4-69.

72. Şekercioğlu. Measurement invariance Concept and implementation measurement invariance concept and implementation measurement-. International Online Journal of Education and Teaching. 2018;5(3):26.

73. Nongluck W. Test of Measurement Invariance across Measured Groups Using Structural Equation Model Analysis. Journal of Research and Curriculum Development2011. p. 69-80.

74. Patwardhan B, Warude D, Pushpangadan P, Bhatt N. Ayurveda and traditional Chinese medicine: A comparative overview. Evidence-based Complementary and Alternative Medicine. 2005;2:465-73.

75. Ierodiakonou C, editor The individuality of each person in the Aristotelian philosophy. European Journal for Person Centered Healthcare; 2013.

76. Pfeifer H-R, Association PT. Section on Honoring Paul Tournier Paul Tournier and 'Médecine de la Personne'-The man and his vision. Conceptual Explorations on Person-centered Medicine International Journal of Integrated Care2010.

77. Serlin IA. Whole Person Health Care: Medicine of the Person. Psyccritiques. 2007;52.

78. Håkansson Eklund J, Holmström IK, Kumlin T, Kaminsky E, Skoglund K, Höglander J, et al. “Same same or different?” A review of reviews of person-centered and patient-centered care. Patient Educ Couns. 2019;102:3-11.

79. Shaller, editor patient-centered care: what does it take?2007.

80. Berwick DM. What 'patient-centered' should mean: Confessions of an extremist. Health Affairs2009. p. w555-w65.

81. Laine C. Patient-Centered Medicine. JAMA. 1996;275:152.

82. Bal A, Mohanty R, Satpathy A, Nayak R, Das AC, Panda S, et al. Patient centered care: A paradigm shift in the delivery of oral health care. Indian Journal of Public Health Research and Development. 2019;10:793-7.

83. Cleary PD. Why is Teamwork in Health Care Important? Global Resource Center. 2021.

84. Kuipers SJ, Cramm JM, Nieboer AP. The importance of patient-centered care and co-creation of care for satisfaction with care and physical and social well-being of patients with multi-morbidity in the primary care setting. BMC Health Services Research. 2019;19.

85. Haskard Zolnierek KB, Dimatteo MR. Physician communication and patient adherence to treatment: A meta-analysis. Medical Care: NIH Public Access; 2009. p. 826-34.

86. John Thomas B, JayaKumar DS, Suganya G. Effect of patient centredness on health service experience: Mediation of patient satisfaction. British Journal of Health Care Management. 2017;23:591-600.

87. Joosten EAG, DeFuentes-Merillas L, De Weert GH, Sensky T, Van Der Staak CPF, De Jong CAJ. Systematic review of the effects of shared decision-making on patient satisfaction, treatment adherence and health status. Psychotherapy and Psychosomatics. 2008;77:219-26.

88. Biglu M, Nateqv F, Ghojazadeh M, Asgharzadeh A. Communication Skills of Physicians and Patients' Satisfaction. Materia Socio Medica. 2017;29:192.

89. Stewart M, Brown JB, Donner A, McWhinney IR, Oates J, Weston WW, et al. The impact of patient-centered care on outcomes. J Fam Pract. 2000;49:796-804.

90. Rathert C, Wyrwich MD, Boren SA. Patient-centered care and outcomes: A systematic review of the literature. Med Care Res Rev. 2013;70:351-79.

91. Rathert C, Williams ES, McCaughey D, Ishqaidef G. Patient perceptions of patient-centred care: empirical test of a theoretical model. Health Expect. 2015;18(2):199-209.

92. Jahan F, Siddiqui H. Good Communication between Doctor-Patient Improves Health Outcome. European Journal of Medical and Health Sciences: European Open Access Publishing (Europa Publishing); 2019.

93. Xu RH, Cheung AWL, Wong ELY. The relationship between patient engagement and health-related quality of life in patients: A cross-sectional study in general outpatient clinic in Hong Kong SAR, China. Patient Preference and Adherence2019. p. 1451-62.

94. Olsson LE, Jakobsson Ung E, Swedberg K, Ekman I. Efficacy of person-centred care as an intervention in controlled trials - a systematic review. Journal of Clinical Nursing. 2013;22:456-65.

95. Ulin K, Malm D, Nygardh A. What Is Known About the Benefits of Patient-Centered Care in Patients with Heart Failure. Curr Heart Fail Rep. 2015;12(6):350-9.

96. Bertakis KD, Azari R. Patient-centered care is associated with decreased health care utilization. J Am Board Fam Med. 2011;24:229-39.

97. Epstein RM, Franks P, Shields CG, Meldrum SC, Miller KN, Campbell TL, et al. Patient-centered communication and diagnostic testing. Ann Fam Med. 2005;3(5):415-21.

98. Kressin NR, Chapman SE, Magnani JW. A Tale of Two Patients: Patient-Centered Approaches to Adherence as a Gateway to Reducing Disparities. Circulation. 2016;133(24):2583-92.

99. Levinson W. Physician-Patient Communication<subtitle>The Relationship With Malpractice Claims Among Primary Care Physicians and Surgeons</subtitle>. JAMA: The Journal of the American Medical Association. 1997;277:553.

100. van Diepen C, Fors A, Ekman I, Hensing G. Association between person-centred care and healthcare providers' job satisfaction and work-related health: a scoping review. BMJ Open. 2020;10(12):e042658.

101. Zarei E, Ahmadi F, Sial MS, Hwang J, Thu PA, Usman SM. Prevalence of Burnout among Primary Health Care Staff and Its Predictors: A Study in Iran. Int J Environ Res Public Health. 2019;16(12).

102. Chang H, Gil C, Kim H, Bea H. Person-Centered Care, Job Stress, and Quality of Life Among Long-Term Care Nursing Staff. The Journal of Nursing Research. 2020;28(5).

103. Epstein RM, Fiscella K, Lesser CS, Stange KC. Why the nation needs a policy push on patient-centered health care. Health Aff (Millwood). 2010;29(8):1489-95.

104. McCormack B, McCance TV. Development of a framework for person-centred nursing. Journal of Advanced Nursing. 2006;56:472-9.

105. Stewart M. The patient-centered clinical method: a family medicine perspective. Turk klin aile hekim özel derg. 2013;17:73-85.

106. Mills A. Patient-Centered Care for Pharmacists. The Canadian Journal of Hospital Pharmacy. 2013;66(2).

107. Lawford BJ, Delany C, Bennell KL, Bills C, Gale J, Hinman RS. Training Physical Therapists in Person-Centered Practice for People With Osteoarthritis: A Qualitative Case Study. Arthritis Care Res (Hoboken). 2018;70(4):558-70.

108. Alrawiai S, Asimakopoulou K, Scambler S. Patient-Centred Care in Dentistry: Definitions and Models - Commentary. Eur J Dent Educ. 2021;25:637-40.

109. Scambler S, Delgado M, Asimakopoulou K. Defining patient-centred care in dentistry? A systematic review of the dental literature. Br Dent J. 2016;221:477-84.

110. Leplege A, Gzil F, Cammelli M, Lefeve C, Pachoud B, Ville I. Person-centredness: Conceptual and historical perspectives. Disability and Rehabilitation. 2007;29:1555-65.

111. Benjaporn K. Patient-centered-Medicine-resident. The Royal college of Family Physicians o Thailand; 2014.

112. Stewart M. Towards a global definition of patient centred care. The patient should be the judge of patient centred care. BMJ. 2001;322:444-5.

113. Levenstein JH, Eric, Mccracken C, Mcwhinney IR, Stewart MA, Brown JB. The patient-centred clinical method 1 a model for the doctor-patient interaction in family medicine. Family Practice. 1986;3:24-30.

114. Wang YY. Patient-centered medicine: transforming the clinical method. Second edition. International Journal of Integrated Care. 2005;5:360.

115. American Academy of Pediatric Dentistry. Policy on the Dental Home American Academy of Pediatric Dentistry. 2018.

116. Picker.org. The Picker Principles of Person Centred care [Available from: https://picker.org/who-we-are/the-picker-principles-of-person-centred-care/.

117. Picker Institute Europe. Influence, inspire, empower. Picker Institute Europe; 2020.

118. The Robert Graham Center. The Patient Centered Medical Home - History, Seven Core Features, Evidence and Transformational Change2007.

119. The Health Foundation. Person-centred care made simple What everyone should know about person-centred care2016.

120. Mezzich JE, Kirisci L, Salloum I, Trivedi J, Kumar Kar S, Adams N, et al. Systematic Conceptualization of Person Centered Medicine and Development and Validation of a Person-centered Care Index. International Journal of Person Centered Medicine. 2017;6.

121. Mezzich JE, Snaedal J, van Weel C, Botbol M, Salloum I. Introduction to person-centred medicine: from concepts to practice. J Eval Clin Pract. 2011;17(2):330-2.

122. Santana MJ, Ahmed S, Lorenzetti D, Jolley RJ, Manalili K, Zelinsky S, et al. Measuring patient-centred system performance: A scoping review of patient-centred care quality indicators. BMJ Open. 2019;9.

123. Britten N, Moore L, Lydahl D, Naldemirci O, Elam M, Wolf A. Elaboration of the Gothenburg model of person-centred care. Health Expect. 2017;20(3):407-18.

124. Britten NE, I; Naldemirci, Ö; et al. Learning from the Gothenburg model. BMJ Open. 2020.

125. The University of Gothenburg Centre for Person-centred Care. GPCC Bropschure English 2019. 2019.

126. Center for Person-centred Cae - GPCC University of Gothenburg. About person-centred care [Available from: https://www.gu.se/en/gpcc/about-person-centred-care.

127. Clarke S, Ells C, Thombs BD, Clarke D. Defining elements of patient-centered care for therapeutic relationships a literature review of common themes. European Journal for Person Centered Healthcare. 2017;5(3):11.

128. The International Alliance of Patients' Organizations (IAPO). Declaration on: Patient-Centred Healthcare. 2016.

129. Loignon C, Allison P, Landry A, Richard L, Brodeur JM, Bedos C. Providing humanistic care: Dentists experiences in deprived areas. J Dent Res. 2010;89(9):991-5.

130. Scambler S, Gupta A, Asimakopoulou K. Patient-centred care - what is it and how is it practised in the dental surgery? Health Expect. 2015;18:2549-58.

131. Apelian N, Vergnes JN, Hovey R, Bedos C. How can we provide person-centred dental care? Br Dent J. 2017;223:419-24.

132. Hunsrisakhun J. Holistic Care in Dentistry Concept towards Clinical Practices. J Dent Assoc Thai. 2010;60(4):293-304.

133. Pongsupap Y. Introducing a Human Dimension to Thai Health Care: The Case for Family Practice 2007.

134. Ministry of Education. Undergraduate qualification standards of Dentistry B.E.2557. The Royal Gazette of Thailand; 2013.

135. Ministry of Education. Undergraduate qualification standards of Phamarcy B.E 2558. The Royal Gazette of Thailand; 2015.

136. Ministry of Education. Undergraduate qualification standards of Nursing Science B.E 2560. The Royal Gazette of Thailand; 2017.

137. Undergraduate qualification standards Phamarcy B.E.2561. The Royal Gazette of Thailand; 2018.

138. Boonsatean W. Self-Management in Persons with Diabetes: Individual Process. Journal of Nursing and Health Care. 2014;32:18-24.

139. Orawan T. Patient-centered care of diabetes patient: A case report. The Thai Journal of Primary Care and Family Medicine. 2019.

140. Pongsupap Y, Archananuparp S, Boonyapaisarncharoen T. District Health System management learning: a big leap forward to people centred district health system in Thailand. Journal of Public Health and Development 2016;14:3-12.

141. Chalongsuk R, Lochidamnuay S, Sribundit N, Poompruek P. Primary pharmaceutical ervice. Thai Bulletin of Pharmaceutical sciences. 2013;8(2):16.

142. Kitreerawutiwong N, Mekrungrongwong S, Keeratisiro O, Hangsuntea J. Palliative Care in District Health System. Journal of Nursing and Health Sciences. 2018;18(special):12.

143. Sinlacksanathip K, Toruksa S., et al. Pre-arrest Care Standard for Crisis Prevention 2010.

144. Juturapatporn D, Hathirat S, Samipak N, Hansahiranvadee W, Bhatanaprabhabhan D. Talking with Angel by Using patient-centered approach A case report of culture bound syndrome from Thailand. Ramathibodi Medical Journal. 2010;33(1):8.

145. Yajai S. Hypertensive control in primary care with patient centered care and continuing care. chiangrai medical journal. 2019;11(2).

146. Jaberi A, Momennasab M, Yektatalab S, Ebadi A, Cheraghi MA. Spiritual Health: A Concept Analysis. J Relig Health. 2019;58(5):1537-60.

147. Ghaderi A, Tabatabaei SM, Nedjat S, Javadi M, Larijani B. Journal of Medical Ethics and History of Medicine Original Article Explanatory definition of the concept of spiritual health : a qualitative study in Iran. Journal of Medical Ethics and History of Medicine2018. p. 1-7.

148. Ontario Hospital Association. Patient and Family Engagement Requirements for Accreditation. 2015.

149. Ministry of Public Health. 4-month short course training in Dental Public Health (Familty dentistry). 2018.

150. Faculty of dentistry; Chiangmai University. Doctor of Dental Surgery Program B.E.2558. 2015.

151. Faculty of dentistry; Konkaen University. Doctor of Dental Surgery Program B.E.2558. 2015.

152. The Dental Council of Thailand. Regulations of the Dental Council On Ethics of the Dental Profession B.E.2538, 1995.

153. The Royal College of Dental Surgeons of Thailand. Residency training courses for certificates showing knowledge and expertise in the practice of dentistry. general dentistry and criteria for training institutes B.E. 2562. 2019.

154. Faculty of dentistry CU. Mission of The dental hospital of faculty of dentistry, Chulalongkorn University [Available from: http://www.dent.chula.ac.th/hospital/.

155. Faculty of dentistry; Chulalongkorn University. Knowledge based humanized healthcare. 2018.

156. Naorungroj S, Manuschai J, Wongwiriyapokin K, Ratti P, Chinniyomwanich W, Horwongsakul S. Patient feedback with patient-centered dental care and its association with emotional intelligence: A cross-sectional study in undergraduate dental students at Prince of Songkla University. Songklanakarin Dent J. 2018;6(2):1-11.

157. Wongnavee K, Tantipoj C, Yuma S, Buranachad N. Essence of comprehensive dentistry scrutinized from dental care experience of advanced gerneral dentists. M Dent J. 2020;40:289-98.

158. Nurash P, Intarakamhang U, Kasevayuth K. Effect of Teaching Program on Oral Health Literacy and Patient-Centered Communication Promotion 1. Journal of Behavioral Science for Development. 2019;71:2651-319.

159. Tuongratanaphan S. Biomedical Science Discourse and Dentists' Oral Health Promotion Concepts: a Case Study in Chiang Mai. 2004.

160. Sopharat P. Oral health care in Dementia: A case report of patient-centered approach of multidisciplinary team. The Thai Journal of Primary Care and Family Medicine. 2019;1(2):8.

161. Preeyanuch B. The risk of dental service behavior for the dental grievance 2004.

162. Corah NL, O'Shea RM, Pace LF, Seyrek SK. Development of a Patient Measure of Satisfaction with the Dentist: The Dental Visit Satisfaction Scale. Journal of Behavioral Medicine. 1984;7(3):7.

163. Mead N, Bower P. Measuring patient-centredness a comparison of three observation-based instrument. Patient Education and Counseling. 2000;39(1):10.

164. Madden JM, Quick -, J D, Ross-Degnan ~~ D, Kafle KK. Undercover careseekers Simulated clients in the study of health provider behavior in developing countries. Social Science & Medicine Journal. 1997;45(10):18.

165. Bader JD, Shugars DA. Dental care plan assessment using the CAHPS dental plan survey. J Public Health Dent. 2012;72:295-301.

166. Gulion N, Vergnes JN. Improving person-centered access to dental care: The walk-in dental encounters in non-emergency situations (wideness). Dent J. 2019;7.

167. Brennan DS, Spencer AJ. Dentist preferences for patients: Dimensions and associations with provider, practice, and service characteristics. International Journal of Behavioral Medicine. 2006;13:69-78.

168. Naorungroj S, Manuschai J, Wongwiriyapokin K, Ratti P, Chinniyomwanich W, Horwongsakul S. Patient feedback with patient-centered dental care and its association with emotional intelligence: A cross-sectional study in undergraduate dental students at Prince of Songkla University. Songklanakarin Dent J. 2018;6.

169. Hojat M, Mangione S, Nasca TJ, Cohen MJM, Gonnella JS, Erdmann JB, et al. The Jefferson Scale of Physician Empathy: Development and preliminary psychometric data. Educational and Psychological Measurement. 2001;61:349-65.

170. Hojat M. Jefferson Scale of Empathy (JSE): User guide. 2016. p. 1-109.

171. Mercer SW, Maxwell M, Heaney D, Watt GCM. The consultation and relational empathy (CARE) measure: Development and preliminary validation and reliability of an empathy-based consultation process measure. Family Practice. 2004;21:699-705.

172. Spreng RN, McKinnon MC, Mar RA, Levine B. The Toronto Empathy Questionnaire: scale development and initial validation of a factor-analytic solution to multiple empathy measures. J Pers Assess. 2009;91(1):62-71.

173. Armfield JM, Ketting M, Chrisopoulos S, Baker SR. Do people trust dentists? Development of the Dentist Trust Scale. Australian Dental Journal. 2017;62:355-62.

174. Krupat E, Yeager CM, Putnam S. Patient role orientations, doctor-patient fit, and visit satisfaction. Psychology and Health. 2000;15:707-19.

175. Schönwetter DJ, Wener ME, Mazurat N. Determining the Validity and Reliability of Clinical Communication Assessment Tools for Dental Patients and Students. Journal of Dental Education. 2012;76:1276-90.

176. Hurst YK, Prescott-Clements LE, Rennie JS. The patient assessment questionnaire: A new instrument for evaluating the interpersonal skills of vocational dental practitioners. Br Dent J. 2004;197:497-500.

177. Johnson BR, Schwartz A, Goldberg J, Koerber A. A Chairside Aid for Shared Decision Making in Dentistry: A Randomized Controlled Trial. Journal of Dental Education. 2006;70:133-41.

178. Hfocus.org. History of dentistry in Thailand: Hfocus.org; 2560 [Available from: https://www.hfocus.org/content/2017/09/14546.

179. The Dental Association of Thailand. History of The dental association of thailand [Available from: https://www.thaidental.or.th/main/page/20/th/%E0%B8%9B%E0%B8%A3%E0%B8%B0%E0%B8%A7%E0%B8%B1%E0%B8%95%E0%B8%B4%E0%B8%84%E0%B8%A7%E0%B8%B2%E0%B8%A1%E0%B9%80%E0%B8%9B%E0%B9%87%E0%B8%99%E0%B8%A1%E0%B8%B2.html.

180. Faculty of dentistry; Chulalongkorn University. History of The Faculty of dentistry, Chulalongkorn University [Available from: http://www.dent.chula.ac.th/dent_2017/history.php.

181. Bureau of Dental Public Health; Department of Health.. Thai History of dentistry.

182. Bussarakamruha J, Wischawut K, Poldeeyiem S, Mongkolarunya S. 10-Years of government contracted dentist. Th Dent PH J. 1997;3(1):9.

183. Chantana U. Dental health services under universal health coverage policy. Health System Research Institute, Thailand; 2003.

184. Jaichuen W. Dentist and Dental Nurse Projections for Thailand in the Year 2026. Journal of Health Systems Research. 2018;12(2):11.

185. Sriwatana W. Access to Dental Service of the Insured in Thailand in B.E. 2559. Journal of Health Science 2017;26:400-8. 2017;26(2):9.

186. Hogarty KY, Hines CV, Kromrey JD, Perron JM, Mumford AKR. The quality of factor solutions in exploratory factor analysis: The influence of sample size, communality, and overdetermination. Educational and Psychological Measurement. 2005;65:202-26.

187. Bryant FB, Yarnold PR, Michelson EA, editors. Statistical methodology: VIII. Using confirmatory factor analysis (CFA) in emergency medicine research. Academic Emergency Medicine; 1999.

188. Osborne JW, Costello AB, Kellow JT. Best Practices in Exploratory Factor Analysis. Best Practices in Quantitative Methods. 2011:86-99.

189. Holtzman S, Vezzu S. Confirmatory Factor Analysis and Structural Equation Modeling of Non-cognitive Assessments Using PROC CALIS. NorthEast SAS Users Group (NESUG),; 2011.

190. Sarmento RP, Costa V. Confirmatory Factor Analysis A Case study. 2019.

191. Schmitt N, Kuljanin G. Measurement invariance: Review of practice and implications. Human Resource Management Review. 2008;18:210-22.

192. Pholpark A, Pongsupap Y, Aekplakorn W, Srithamrongsawat S, Sunsern R. Responsiveness under different health insurance schemes and hospital types. journal of Health Systems Research. 2012;6(5).

193. Liabsuetrakul T, Petmanee P, Sanguanchua S, Oumudee N. Health system responsiveness for delivery care in Southern Thailand. International Journal for Quality in Health Care. 2012;24(2):7.

194. Lateef A, Mhlongo EM. Nurses' Encountered Challenges with Patient-centered Care in Rural Primary Health Care Centers: A Case Study of Nigeria. In: Campus UoK-N-HC, editor. 2021.

195. Al-Sahli B, Eldali A, Aljuaid M, Al-Surimi K. Person-Centered Care in a Tertiary Hospital Through Patient's Eyes: A Cross-Sectional Study. Patient Prefer Adherence. 2021;15:761-73.

196. Roen I, Kirkevold O, Testad I, Selbæk G, Engedal K, Bergh S. Person-centered care in Norwegian nursing homes and its relation to organizational factors and staff characteristics: A cross-sectional survey. International Psychogeriatrics: Cambridge University Press; 2018. p. 1279-90.

197. Thaiautvitee T, Jumpamool A. Factors Influencing Patient- Centered Care as Perceived by Registered Nurses Working in Srinagarind Hospital, Khonkaen University. Srinagarind Medical Journal. 2019;34(2).

198. Backman A, Sandman PO, Skoldunger A. Characteristics of nursing home units with high versus low levels of person-centred care in relation to leadership, staff- resident- and facility factors: findings from SWENIS, a cross-sectional study in Sweden. BMC Geriatr. 2021;21(1):498.

199. Costello AB, Osborne JW. Best Practices in Exploratory Factor Analysis: Four Recommendations for Getting the Most from Your Analysis. PARE. 2005;10:1-9.

200. Preacher KJ, Coffman DL. Computing power and minimum sample size for RMSEA 2006 [Available from: http://quantpsy.org/.

201. Shin S, Kang J. Development and Validation of a Person-Centered Perioperative Nursing Scale. Asian Nurs Res (Korean Soc Nurs Sci). 2019;13(3):221-7.

202. Barbara. S. Is primary care essential? [Primary Care Tomorrow]. Lancet. 1994;344(8930):1129-33.

203. Polit DF, Beck CT, Owen SV. Is the CVI an acceptable indicator of content validity? Appraisal and recommendations. Res Nurs Health. 2007;30(4):459-67.

204. Braun V, Clarke V. Using thematic analysis in psychology. Qual Res Psychol. 2006;3(2):77-101.

205. Watkins MW. Exploratory Factor Analysis: A Guide to Best Practice. J Black Psychol. 2018;44(3):219-46.

206. Knapp TR. Coefficient alpha: conceptualizations and anomalies. Res Nurs Health 1991;14(6):457-60. .

207. Hu Lt, Bentler PM. Cutoff criteria for fit indexes in covariance structure analysis: Conventional criteria versus new alternatives. Struct Equ Modeling. 1999;6(1):1-55.

208. Hair JF, Black WC, Babin BJ, Anderson RE. Multivariate Data Analysis 7ed. Upper Saddle River, NJ: Pearson; 2009.

209. Anindita FTWD. Employability Scale: Construct Validity And Reliability. international journal of scientific & technology research 9(4):3166-70.

210. Engellant KA, Holland DD, Piper RT. Assessing Convergent and Discriminant Validity of the Motivation Construct for the Technology Integration Education (TIE) Model. Journal of Higher Education Theory and Practice 2016;16(1):37-50.

211. Putnick DL, Bornstein MH. Measurement invariance: Review of practice and implications. HRMR. 2008;18:210-22.

212. Meade AW, Johnson EC, Braddy PW. Power and sensitivity of alternative fit indices in tests of measurement invariance. J Appl Psychol. 2008;93(3):568-92.

213. Koo TK, Li MY. A Guideline of Selecting and Reporting Intraclass Correlation Coefficients for Reliability Research. J Chiropr Med. 2016;15(2):155-63.

214. Matsunaga M. How to Factor-Analyze Your Data Right: Do's, Don'ts, and How-To's. IJPR. 2010;3(1):97-110.

215. Cheung GW, Rensvold RB. Testing Factorial Invariance across Groups: A Reconceptualization and Proposed New Method. Journal of Management. 2016;25(1):1-27.

216. Silanoi L, Chindaprasert K. The Use of Rating Scale in Quantitative Research on Social Sciences, Humanities, Hotel and Tourism Study. Journal of Management Science, Ubon Ratchathani University. 2019;8(15):112-26.

217. Donaldson MS, Yordy KD, Lohr KN. Primary Care: America's Health in a New Washington, D.C.: National academy press; 1996.

218. Damiano P, Reynolds J, Herndon JB, McKernan S, Kuthy R. The patient-centered dental home: A standardized definition for quality assessment, improvement, and integration. Health Serv Res. 2019;54(2):446-54.

219. Bedos C, Apelian N, Vergnes JN. Towards a biopsychosocial approach in dentistry: the Montreal-Toulouse Model. Br Dent J. 2020;228(6):465-8.

220. Polit DF, Beck CT. The content validity index: are you sure you know what's being reported? Critique and recommendations. Res Nurs Health. 2006;29(5):489-97.

221. Rozier RG, White BA, Wang M, Meyer BD, Lee JY. Development and testing of a patient-centered dental home assessment for low-income families. J Public Health Dent. 2019;79(3):253-63.

222. Chongkonsatit W, Wongsinphaibon N, Kurupakorn A, Urairoekkun K, Noimanee K. 7Cs marketing mix factors in a dental school comprehensive care clinic: A confirmatory factor analysis. M Dent J. 2022;42(1):13-24.

223. Kitreerawutiwong K, Sriruecha C, Laohasiriwong W. Development of the competency scale for primary care managers in Thailand: Scale development. BMC Fam Pract. 2015;16:174.

224. Detsomboonrat P, Theppanich S, Banyen S, Hongviphat S, Khamnil Y, Lapauthaya K, et al. Empathy level towards patients among thai dental students: a cross-sectional study. BMC Oral Health. 2023;23(1):184.

225. Lee M, Song Y, You M, Park SY, Ihm J. Dentists' attitudes toward patient-centered care and its predictors: a cross-sectional study in South Korea. BMC Oral Health. 2023;23(1):75.

226. Gonzales PS, Martins IEF, Biazevic MG, Silva PR, Michel-Crosato E. Dental Management Survey Brazil (DMS-BR): creation and validation of a management instrument. Braz Oral Res. 2017;31:e26.

227. Nontapet O, Isaramalai S-a, Petpichatchain W, Brooks CW. Conceptual Structure of Primary Care Competency for Thai Primary Care Unit (PCU) Nurses. Thai J Nurs Re. 2008;12(3):195-206.

Appendix A-1

Semi-structure question for expert in-depth interview

แบบสอบถามกึ่งโครงสร้างในการสัมภาษณ์เชิงลึกผู้เชี่ยวชาญ

การวิจัยเรื่องการพัฒนาเครื่องมือวัดการดูแลผู้ป่วยแบบยึดผู้ป่วยเป็นศูนย์กลาง

ของทันตแพทย์ในหน่วยบริการปฐมภูมิ

1. ทันตกรรมปฐมภูมิคืออะไร
2. การดูแลผู้ป่วยแบบยึดผู้ป่วยเป็นศูนย์กลาง ในการบริการทันตกรรมคืออะไร
3. ท่านคิดว่าการดูแลผู้ป่วยแบบยึดผู้ป่วยเป็นศูนย์กลาง จำเป็นสำหรับการบริการทันตกรรมปฐมภูมิหรือไม่
4. การดูแลผู้ป่วยแบบยึดผู้ป่วยเป็นศูนย์กลาง กับการดูแลผู้ป่วยแบบยึดบุคคลเป็นศูนย์ เหมือนหรือต่างกัน หรือไม่ อย่างไร
5. การดูแลผู้ป่วยแบบยึดผู้ป่วยเป็นศูนย์กลาง มีองค์ประกอบอะไรบ้าง
6. ท่านให้การดูแลผู้ป่วยแบบยึดผู้ป่วยเป็นศูนย์กลาง อย่างไร
7. ถ้าจะวัดการดูแลผู้ป่วยแบบยึดผู้ป่วยเป็นศูนย์กลาง ท่านคิดว่าอะไรคือตัวชี้วัด กรุณาให้ตัวอย่างของคำถามในการวัด หรือวิธีที่เหมาะสมในการวัด
8. อะไรคืออุปสรรค และอะไรการส่งเสริม การดูแลผู้ป่วยแบบยึดผู้ป่วยเป็นศูนย์กลาง

Appendix A-2

Semi-structure question for patient in-depth interview

แบบสอบถามกึ่งโครงสร้างในการสัมภาษณ์เชิงลึกผู้ป่วย

การวิจัยเรื่องการพัฒนาเครื่องมือวัดการดูแลผู้ป่วยแบบยึดผู้ป่วยเป็นศูนย์กลาง

ของทันตแพทย์ในหน่วยบริการปฐมภูมิ

1. ให้เล่าประสบการณ์การดูแลที่ได้รับจากทันตแพทย์ และทีมทันตบุคลากรว่าเป็นอย่างไร อะไรคือสิ่งประทับใจ สิ่งที่ดี และอยากได้รับบริการแบบนี้เสมอๆ
2. ให้เล่าประสบการณ์การดูแลที่ได้รับจากทันตแพทย์ และทีมทันตบุคลากรว่าอะไรคือสิ่งที่ต้องปรับปรุง สิ่งที่อยากให้แก้ไข
3. ท่านคิดว่าการดูแลผู้ป่วยแบบยึดผู้ป่วยเป็นศูนย์กลางในการบริการทันตกรรมเป็นอย่างไร
4. ท่านคิดว่าการดูแลผู้ป่วยแบบยึดผู้ป่วยเป็นศูนย์กลางจำเป็นสำหรับการบริการทันตกรรมหรือไม่ เพราะเหตุใด
5. ถ้าจะวัดการดูแลผู้ป่วยแบบยึดผู้ป่วยเป็นศูนย์กลาง ท่านคิดว่าอะไรคือตัวชี้วัด กรุณาให้ตัวอย่างของคำถามในการวัด หรือวิธีที่เหมาะสมในการวัด
6. ควรทำอย่างไรถึงจะส่งเสริมให้ทันตแพทย์ดูแลท่านแบบยึดตัวผู้ป่วยเป็นศูนย์กลาง

Appendix B-1

61 Initial 61-Item of PCCDS-P version based on 12 operation definitions and some existing instruments.

1.การดูแลผู้ป่วยแบบองค์รวม (Whole person/ holistic)	พฤติกรรมของท่านหรือสิ่งที่ท่านคำนึงถึงหรือรับรู้ได้ขณะให้บริการผู้ป่วย	Item ID	พัฒนาโดยผู้วิจัย	แปลและปรับจาก
หมายถึง การให้บริการผู้ป่วยโดย คำนึงถึงสภาวะสุขภาพทางกาย ทางจิตใจ สภาพความเป็นตัวตนที่แท้จริงของผู้ป่วยซึ่งมีสภาวะโรคที่แตกต่างกันไป มีความชอบ มีความสนใจ และให้คุณค่าในประเด็นที่เกี่ยวข้องกับการดูแลรักษาแตกต่างกันไป, คำนึงถึงบริบทและอิทธิพลของครอบครัว และชุมชนที่อยู่อาศัย การศึกษา ศาสนา เชื้อชาติ อาชีพ การดำเนินชีวิต กิจวัตร สิ่งแวดล้อม รวมไปถึงสังคมและวัฒนธรรมที่ส่งผลต่อชีวิตความเป็นอยู่ของผู้ป่วยและญาติ โดยนำข้อมูลเหล่านี้มาประกอบการดูแลผู้ป่วย การพิจารณา	1. ทันตแพทย์สอบถามถึงการใช้ชีวิต ทั่วๆไป เช่น บ้านอยู่ที่ไหน การทำงาน การศึกษา ครอบครัว เพื่อนๆ การดำเนินชีวิตทั่วไปของข้าพเจ้า	wp1.1		Naorungroj et al., 2018
	2. ทันตแพทย์เปิดโอกาสให้ข้าพเจ้าได้บอกอาการสำคัญ และความต้องการ หรือความคิดเห็นเกี่ยวกับสุขภาพปากและฟันของข้าพเจ้า	wp2.2		Naorungroj et al., 2018
	3. ทันตแพทย์ ตอบสนองต่ออาการสำคัญ และความต้องการ และความคิดเห็นเกี่ยวกับสุขภาพปากและฟันของข้าพเจ้า	wp3.3		Naorungroj et al., 2018
	4. ทันตแพทย์สอบถามถึงปัญหา ข้อจำกัด หรืออุปสรรค ที่เกี่ยวข้องกับกระบวนการในการรักษาฟันของข้าพเจ้า เช่น โรคประจำตัว การมี	wp4.4		Naorungroj et al., 2018

วิธีการรักษา	เวลาจำกัด ค่าใช้จ่าย การเดินทาง ของข้าพเจ้า			
	5. ทันตแพทย์นำข้อจำกัดต่างๆ ของข้าพเจ้า เช่น โรคประจำตัว เวลาที่มีจำกัด ค่าใช้จ่าย การเดินทาง มาพิจารณาในการวางแผนการรักษาข้าพเจ้า	wp5.5		Naorungroj et al., 2018
	6. ทันตแพทย์ให้บริการข้าพเจ้าด้วยท่าทีรีบร้อน	wp6.6		Hurst YK et al., 2004
2.การค้นหาโรคและความเจ็บป่วยที่แท้จริง (Disease and illness)	**พฤติกรรมของท่านหรือสิ่งที่ท่านคำนึงถึงหรือรับรู้ได้ขณะให้บริการผู้ป่วย**	**Item ID**	**พัฒนาโดยผู้วิจัย**	**แปลและปรับจาก**
หมายถึง ทันตแพทย์สามารถประเมินความคิดและการรับรู้ของผู้ป่วยต่อภาวะสุขภาพที่ดี สภาวะสุขภาพในปัจจุบัน ความเจ็บป่วยหรือโรคที่เกิดขึ้น และประสบการณ์การเจ็บป่วยในอดีต สามารถค้นหาประสบการณ์ต่อความเจ็บป่วย (illness) ด้วยเทคนิค IFFE ได้แก่ Idea เป็นการประเมินความคิดความเข้าใจเกี่ยวกับโรคที่เกิดขึ้น โดยควรพิจารณาในประเด็นที่มาและความถูกต้องของความคิดความเข้าใจเกี่ยวกับโรค, Feeling เป็นการประเมินความรู้สึกของผู้ป่วยต่อความ	7. ทันตแพทย์ได้พยายามสืบค้นถึง สาเหตุของการเจ็บป่วยของข้าพเจ้า ไม่เพียงแต่ ตรวจในช่องปากแต่สอบถามถึงสาเหตุอื่นๆ ร่วมด้วย เช่น ลักษณะการกิน การเคี้ยว ภาวะทางจิตใจ ความเครียด อุปนิสัยอื่นๆ ที่เกี่ยวข้อง	di1.7	✓	
	8. ทันตแพทย์สามารถตรวจวินิจฉัยโรค เพื่อค้นหาสาเหตุการเจ็บป่วยได้อย่างเหมาะสม	di2.8	✓	
	9. ทันตแพทย์เปิดโอกาศให้ได้บอกว่า ข้าพเจ้าคิดว่าตนเองป่วยเป็นอะไร	di3.9	✓	
	10. ทันตแพทย์เปิดโอกาสให้ข้าพเจ้าเล่าถึงความกังวลต่อความเจ็บป่วยในช่องปาก	di4.10	✓	

เจ็บป่วยที่เกิดขึ้น โดยควรพิจารณาในประเด็นที่มาและความเหมาะสมของความรู้สึกที่เกิดขึ้นต่อความเจ็บป่วยร่วมด้วย, Function เป็นการประเมินผลกระทบต่อชีวิตของผู้ป่วย ทั้งในด้านการดำเนินชีวิตประจำวัน การทำงาน ครอบครัว และสังคม ที่เกิดขึ้นจากความเจ็บป่วย และ Expectation เป็นการประเมินความคาดหวังของผู้ป่วยที่มีตต่อการรักษาจากทันตแพทย์และต่อการดำเนินไปของโรค	11. ทันตแพทย์สอบถามถึงผลของการเจ็บป่วยในช่องปากต่อการดำเนินชีวิตประจำวัน หรือ การทำงาน หรือการเรียนของข้าพเจ้า	di5.11	✓	
	12. ข้าพเจ้ามีโอกาสบอกถึงความคาดหวังต่อการมารับการรักษาครั้งนี้	di6.12		
3. การให้และรับรู้ข้อมูลการเจ็บป่วย และร่วมการตัดสินใจในการดูแลรักษาร่วมกับผู้ป่วยและญาติ (Shared information and decision making)	**พฤติกรรมของท่านหรือสิ่งที่ท่านคำนึงถึงหรือรับรู้ได้ขณะให้บริการผู้ป่วย**	Item ID	**พัฒนาโดยผู้วิจัย**	**แปลและปรับจาก**
หมายถึง เมื่อรวบรวมข้อมูลความเจ็บป่วยและการวินิจฉัยโรคได้แล้ว ทันตแพทย์ต้องกำหนดความสำคัญของปัญหาต่างๆ ตั้งเป้าหมายและวางแผนการรักษาโดยการให้ข้อมูลที่ครบถ้วนเหมาะสม ทั้งแผนการรักษาทางเลือกในการรักษา และค่าใช้จ่ายในการรักษา โดยส่งเสริมการร่วมกันตัดสินใจในทางเลือกการรักษา การ	13. เพราะการดูแลและอธิบายของทันตแพทย์ทำให้ข้าพเจ้าทราบดีว่าผลการรักษาที่จะเกิดขึ้นนั้นเป็นผลของการร่วมมือในการดูแลตัวข้าพเจ้าเอง และทันตแพทย์ที่ให้การรักษา	sd1.12	✓	
	14. ทันตแพทย์ให้ข้าพเจ้ามีส่วนร่วมในการตัดสินใจร่วมกัน ในการเลือกการรักษาที่เหมาะสมกับข้าพเจ้า	sd2.13		Naorungroj et al., 2018

ดูแล ทั้งระหว่างและภายหลังการรักษา ร่วมกันระหว่างทันตแพทย์และผู้ป่วย/ญาติ, เปิดโอกาสในการซักถามจนเข้าใจถึงแผนและทางเลือกในการรักษา ถึงข้อดีและข้อเสียของทางเลือกการรักษาต่างๆ รวมทั้งแผนการดูแลต่อเนื่อง ด้วย	15. ทันตแพทย์เปิดโอกาสให้ข้าพเจ้าได้ร่วมกำหนดเป้าหมายการรักษาร่วมกับทันตแพทย์	sd3.14	✓	
	16. ทันตแพทย์ได้อธิบายแผนและขั้นตอนการการรักษา รวมถึงระยะเวลารักษาอย่างละเอียด	sd4.15		Naorungroj et al., 2018
	17. ทันตแพทย์ได้อธิบายถึง ข้อดี ข้อเสีย ค่าใช้จ่าย ทางเลือกในการรักษา ผลที่อาจเป็นไปได้ของการรักษา	sd5.16		Naorungroj et al., 2018
4. การสร้างความสัมพันธ์ที่ดีและเหมาะสมระหว่างท่านกับผู้ป่วยและญาติ (Dentist-patient relationship)	**พฤติกรรมของท่านหรือสิ่งที่ท่านคำนึงถึงหรือรับรู้ได้ขณะให้บริการผู้ป่วย**	**Item ID**	**พัฒนาโดยผู้วิจัย**	**แปลและปรับจาก**
หมายถึง ความสัมพันธ์ที่ดีระหว่างทันตแพทย์กับผู้ป่วยและญาติที่เป็นประโยชน์ต่อการรักษา และทำให้พัฒนาศักยภาพในการดูแลตนเองของผู้ป่วยได้ ทันตแพทย์แสดงออกถึงการเคารพในความเป็นคนที่เท่าเทียมกัน การให้เกียรติ เคารพในความแตกต่าง ซื่อสัตย์ เคารพสิทธิผู้ป่วย รักษาความลับ ใส่ใจในการดูแล การควบคุมระดับหรือระยะความสัมพันธ์ที่เหมาะสมไม่ก้าวก่ายหรือห่างเหินเกินไป และเป็นความสัมพันธ์แห่งความไว้วางใจ	18. ทันตแพทย์ได้ให้การดูแลข้าพเจ้าด้วยความเคารพในศักดิ์ศรีความเป็นคน ทันตแพทย์มิได้มองข้าพเจ้าเพียงปาก และฟัน ที่เป็นเพียงอวัยวะหนึ่งที่ไม่มีจิตใจ	dp1.18		CAHPS dental plan survey, 2009
	19. ทันตแพทย์ทำให้ข้าพเจ้าไม่เคยกังวลใดๆ เลย เมื่อสุขภาพช่องปากและฟันของข้าพเจ้า มาอยู่ในการดูแลของเขา	dp2.19	✓	
	20. ทันตแพทย์แสดงท่าที รังเกียจ หรือไม่สบายใจ เมื่อต้องให้การรักษาแก่ข้าพเจ้า หรือแก่ผู้ป่วยคนอื่น ที่มีความแตกต่างกัน เช่น ฐานะ สภาพ	dp3.2	✓	

ไว้เนื้อเชื่อใจ ซึ่งกันและกัน	พิการ การแต่งกาย ความสะอาดสะอ้าน	0		
	21. ทันตแพทย์ให้การดูแลแตกต่างกันเมื่อ ข้าพเจ้าและผู้ป่วยคนอื่นๆ มีสิทธิการรักษาที่ต่างกัน	dp4.21	✓	
	22. ทันตแพทย์ทำให้ข้าพเจ้าไว้วางใจในตัวทันตแพทย์	dp5.22		Armfield JM et al., 2017
	23. ทันตแพทย์เอาใจใส่ในการดูแลสุขภาพปากและฟันของข้าพเจ้า	dp6.23	✓	
	24. ข้าพเจ้ามั่นใจว่าจะสามารถดูแล รักษาสุขภาพช่องปากของข้าพเจ้าได้เองอย่างเหมาะสม เมื่อได้รับการดูแลจากทันตแพทย์ที่นี่	dp7.24	✓	
	25. ทันตแพทย์ดูแลข้าพเจ้าดี ทำให้ข้าพเจ้าจะกลับมารักษาที่นี่เป็นประจำ	dp8.25		Naorungroj et al., 2018
	26. ทันตแพทย์ให้บริการข้าพเจ้าด้วยความซื่อสัตย์	dp9.26	✓	

5. การเท่าทันและตระหนักรู้ในตัวตน รวมทั้งรับรู้ว่าตัวทันตแทพย์เองก็เป็นมนุษย์คนหนึ่ง (Dentist self-awareness)	**พฤติกรรมของท่านหรือสิ่งที่ท่านคำนึงถึงหรือรับรู้ได้ขณะให้บริการผู้ป่วย**	Item ID	**พัฒนาโดยผู้วิจัย**	**แปลและปรับจาก**
หมายถึง ความสามารถจัดการต่ออารมณ์ความรู้สึกของตนเองได้ ไม่เข้าไปเป็นส่วนหนึ่งของอารมณ์ทางลบหรือบวกของผู้ป่วยมากเกินไป และตระหนักว่าตนเองก็เป็นปุถุชนที่สามารถมีอารมณ์ความรู้สึกต่างๆ ได้ รู้เท่าทันและสามารถจัดการกับความรู้สึกของตนเองได้อย่างเหมาะสมเมื่อต้องเผชิญกับสถานการณ์ต่างๆ ใน ผู้ป่วยแต่ละราย ซึ่งจะส่งผลให้การบริการได้อย่างเหมาะสมกับผู้ป่วยแต่ละราย	27. ทันตแพทย์อารมณ์ดี สบายใจ ขณะให้บริการข้าพเจ้า	sa1.27		Hurst YK et al., 2004
	28. ทันตแพทย์แสดงความไม่พอใจ หรืออารมณ์เสีย ใส่ข้าพเจ้า	sa2.28	✓	
	29. ทันตแพทย์บ่น หรือหงุดหงิดใส่ผู้ช่วย หรือเจ้าหน้าที่	sa3.29	✓	
6.ความเห็นอกเห็นใจ (Empathy)	**พฤติกรรมของท่านหรือสิ่งที่ท่านคำนึงถึงหรือรับรู้ได้ขณะให้บริการผู้ป่วย**	**Item ID**	**พัฒนาโดยผู้วิจัย**	**แปลและปรับจาก**
หมายถึง ทันตแพทย์สามารถเข้าใจในความรู้สึกของผู้ป่วย ร่วมรับรู้หรือร่วมรู้สึกต่อความเจ็บป่วย หรือปัญหาสุขภาพช่องปากเช่นเดียวกับที่ผู้ป่วยรู้สึก มองชีวิตหรือความเจ็บป่วยในมุมมองเดี่ยวกับผู้ป่วย ดูแลผู้ป่วย	30. ทันตแพทย์แสดงความเห็นอกเห็นใจข้าพเจ้าหรือญาติ หรือครอบครัว	em1.32	✓	
	31. เมื่อข้าพเจ้าเล่าประวัติความเจ็บป่วย ความกังวล ความคิดเห็นต่อการเจ็บป่วยของข้าพเจ้า	em2.3		Hojat et al, 2009

ด้วยความเมตตา และเห็นใจผู้ป่วย	ให้ทันตแพทย์ทราบ ข้าพเจ้าคิดว่าทันตแพทย์เข้าใจและมองเห็นความเจ็บป่วยได้ในมุมมองเดียวกับข้าพเจ้า	3		
	32. แม้ข้าพเจ้าได้แสดงให้ทันตแพทย์รับรู้ต่อความรู้สึก หรือความกังวลของข้าพเจ้า แต่ทันตแพทย์ก็ไม่นำมาคำนึงถึงในการดูแลรักษาข้าพเจ้า	em3.34	✓	
	33. ทันตแพทย์มีความเมตตา ต่อความยุ่งยากในการดูแลรักษาข้าพเจ้า	em4.35	✓	
	34. ภายหลังการทำฟัน ทันตแพทย์ได้สอบถามหรือเปิดโอกาสให้ข้าพเจ้าบอกเล่าความรู้สึกความคิดเห็นต่อการรักษา	em5.36		Hojat et al, 2009
7.การจัดการความเจ็บปวดและความกังวลหรือกลัวการทำฟัน (Pain and dental anxiety management)	**พฤติกรรมของท่านหรือสิ่งที่ท่านคำนึงถึงหรือรับรู้ได้ขณะให้บริการผู้ป่วย**	Item ID	**พัฒนาโดยผู้วิจัย**	**แปลและปรับจาก**
หมายถึง ความสามารถในการให้บริการหรือทำหัตถการได้อย่างนุ่มนวล คำนึงถึงความรู้สึกเจ็บปวดของผู้ป่วย สามารถจัดการภาวะกลัวหรือวิตกกังวลในการทำฟันได้	35. ทันตแพทย์พูดคุยกับข้าพเจ้า เพื่อให้ข้าพเจ้าคลายกังวล และ สบายใจขึ้นก่อนที่จะทำฟัน	an1.38	✓	

อย่างเหมาะสม สำหรับผู้ป่วยที่แตกต่างกัน	36. ข้าพเจ้าจะได้รับการเตือนทุกครั้ง ก่อนที่ทันตแพทย์จะลงมือทำฟันที่อาจทำให้ข้าพเจ้าเจ็บหรือเสียวมาก เช่น เริ่มฉีดยาชา เริ่มกรอฟัน เมื่อจะงัดฟันแรงๆ หรือขยับเก้าอี้ทำฟันขึ้นลงเร็วๆ เป็นต้น	an2.39		Hurst YK et al., 2004
	37. ข้าพเจ้าได้รับการสอบถามความรู้สึกเจ็บปวดจากทันตแพทย์ ขณะให้บริการทำฟันอยู่เป็นระยะๆ	an3.40		Naorungroj et al., 2018
	38. ขณะทำฟันข้าพเจ้าต้องคอยบอกให้ทันตแพทย์เบาๆ มือ หรือให้หยุดบ่อยๆ เพราะข้าพเจ้าเจ็บหรือเสียวฟัน จนทนไม่ได้	an4.41	✓	
8. การสื่อสาร (Communication)	**พฤติกรรมของท่านหรือสิ่งที่ท่านคำนึงถึงหรือรับรู้ได้ขณะให้บริการผู้ป่วย**	**Item ID**	**พัฒนาโดยผู้วิจัย**	**แปลและปรับจาก**
หมายถึง ทันตแพทย์สามารถสื่อสารที่ยึดผู้ป่วยเป็นศูนย์กลางโดยเป็นการสื่อสารกับผู้ป่วยและ/หรือญาติ การกล่าวทักทายและแนะนำตนเอง การพูดด้วยภาษาที่	39. ทันตแพทย์ มักกล่าวทักทาย อย่างเป็นมิตร	co1.42		Hurst YK et al., 2004
	40. ทันตแพทย์ให้เวลาข้าพเจ้าอย่างเพียงพอในการเล่าอาการ และประวัติความเจ็บป่วย	co2.43		Naorungroj et al., 2018

เข้าใจง่าย, การฟังอย่างตั้งใจ ลึกซึ้ง, ให้เวลาอย่างเพียงพอต่อการสนทนากับผู้ป่วยและญาติ, สามารถสื่อสารได้เหมาะสมทั้งคำพูดและท่าที, ใช้สื่อประกอบการอธิบาย, สามารถทวนสอบและสะท้อนกลับความเข้าใจที่ได้จากการสนทนาได้อย่างเหมาะสม	41. ทันตแพทย์ตั้งใจฟัง สบตา มองข้าพเจ้ามากกว่ามองเอกสารหรือจอคอมพิวเตอร์ และแสดงท่าทีสนใจในคำบอกเล่าอาการของข้าพเจ้า	co3.44	✓	
	42. ทันตแพทย์อธิบาย หรือพูดคุย ด้วยภาษาที่เข้าใจได้ง่าย ไม่ใช้ศัพท์ทางการแพทย์มากเกินไป	co4.45		CAHPS dental plan survey, 2009
	43. ทันตแพทย์ไม่ค่อยพูด อธิบาย หรือตอบข้อสักถามเท่าที่ควร จะมีลักษณะถามคำตอบคำ	co5.46	✓	
	44. ทันตแพทย์มักพูดเร่งรัดหรือตัดบท ขณะที่ข้าพเจ้ากำลังเล่าและอธิบายรายละเอียดถึงอาการ ความเจ็บป่วยของข้าพเจ้า	co6.47		Naorungroj et al., 2018
	45. ทันตแพทย์ใช้อุปกรณ์ หรือสื่อต่างๆ เช่นแผ่นพับ รูปภาพ วิดีโอ หรือให้ดูฟิล์ม เอ็กซเรย์ประกอบการวินิจฉัย การรักษาโรค หรือการให้คำแนะนำต่างๆ หลังการรักษา	co7.48		Naorungroj et al., 2018
	46. ทันตแพทย์สอบถามข้าพเจ้าว่ามีข้อสงสัย มีคำถาม หรือไม่เข้าใจจุดไหน	co8.49	✓	
9. การดูแลแบบผสมผสาน (Comprehensive)	**พฤติกรรมของท่านหรือสิ่งที่ท่านคำนึงถึงหรือรับรู้**	**Item**	**พัฒนา**	**แปลและปรับจาก**

	ได้ขณะให้บริการผู้ป่วย	ID	โดยผู้วิจัย	
หมายถึง ทันตแพทย์ให้บริการดูแลรักษาโรคในช่องปาก เพื่อคงสภาพช่องปากที่ดีตลอดเวลา รวมถึงแสวงหาวิธีการในการส่งเสริมสุขภาพ ป้องกันโรค และฟื้นฟูจากการเจ็บป่วย ได้อย่างเหมาะสม ครอบคลุมปัญหาสุขภาพช่องปากส่วนใหญ่ ทั้งฟัน เหงือก และเนื้อเยื่อต่างๆ ในช่องปาก และดูแลตลอดทุกช่วงวัยของผู้ป่วย รวมทั้งสามารถให้การรักษาโดยคำนึงและเชื่อมโยงกับโรคอื่นๆ ทางระบบอย่างสมเหตุสมผล	47. ทันตแพทย์ได้แนะนำวิธีการดูแลสุขภาพปากและฟัน เช่น วิธีแปรงฟัน วิธีใช้ไหมขัดฟัน แนะนำอาหารที่ควรหลีกเลี่ยงเช่น ลูกอม น้ำอัดลม	cp1.50	✓	
	48. ทันตแพทย์ตรวจช่องปากครอบคลุมทุกส่วนในช่องปาก เพื่อเป็นการประเมินสุขภาพช่องปากและฟันให้ข้าพเจ้า ไม่เฉพาะบริเวณฟันหรือเหงือกตำแหน่งที่ข้าพเจ้ามีปัญหาเท่านั้น	cp2.51		Naorungroj et al., 2018
	49. เพราะทันตแพทย์อธิบายข้าพเจ้าจึงเข้าใจว่าสุขภาพปากและฟันของข้าพเจ้าเชื่อมโยงกับสุขภาพทางกาย	cp3.52	✓	
	50. ข้าพเจ้าสนใจที่จะดูแลรักษาสุขภาพช่องปากของตนเองมากขึ้น เมื่อมารับบริการที่นี่ เพราะทันตแพทย์แนะนำ เช่น ข้าพเจ้าแปรงฟันด้วยยาสีฟันผสมฟลูออไรด์ สม่ำเสมอ และก่อนนอน ข้าพเจ้าลดการบริโภคอาหารหวาน น ;ำอัดลม ลูกอมต่างๆ	cp4.53	✓	

	51. ทันตแพทย์ตรวจและให้บริการเฉพาะบริเวณฟันหรือเหงือกตำแหน่งที่ข้าพเจ้ามีปัญหาเท่านั้น ไม่ได้ตรวจช่องปากส่วนอื่นๆ เลย			
10.การประสานการทำงาน (Coordinated)	**พฤติกรรมของท่านหรือสิ่งที่ท่านคำนึงถึงหรือรับรู้ได้ขณะให้บริการผู้ป่วย**	**Item ID**	**พัฒนาโดยผู้วิจัย**	**แปลและปรับจาก**
หมายถึง บทบาทของทันตแพทย์ในการทำงานประสานกันระหว่างทันตแพทย์เจ้าของไข้กับทันตแพทย์คนอื่น ทั้งที่หน่วยบริการเดียวกันหรือต่างหน่วยบริการ หรือประสานกับผู้ช่วยและเจ้าหน้าที่ต่างๆในแผนกทันตกรรมเอง หรือประสานกับบุลคลากรอื่นๆระหว่างแผนกในหน่วยบริการเดียวกันได้อย่างราบรื่น โดยคำนึงถึงผู้ป่วยเป็นหลัก	52. การประสานงานระหว่างทันตแพทย์ กับทันตแพทย์ด้วยกัน หรือกับเจ้าหน้าที่ในแผนกทันตกรรม มีความราบรื่น สะดวกสบาย รวดเร็ว	co1.54	✓	
	53. ทันตแพทย์ประสานการทำงานกับแผนกอื่นๆ เช่น เช่น ห้องบัตร ห้องจ่ายยา ห้องเก็บเงิน หรือห้องตรวจโรค ด้วยการยึดประโยชน์ผู้ป่วยเป็นหลัก	co2.55	✓	
	54. เมื่อต้องมีการประสานงานระหว่างหน่วยงานต่างๆ หรือ ภายในแผนกทันตกรรม ข้าพจ้าพบว่าทันตแพทย์มักยึดติดกับระเบียบมากกว่าที่จะคำนึงถึงประโยชน์ต่อผู้ป่วย	co3.56	✓	
11. การดูแลผู้ป่วยได้อย่างต่อเนื่อง (Continuous)	**พฤติกรรมของท่านหรือสิ่งที่ท่านคำนึงถึงหรือรับรู้ได้ขณะให้บริการผู้ป่วย**	**Item ID**	**พัฒนาโดยผู้วิจัย**	**แปลและปรับจาก**

หมายถึง ทันตแพทย์เจ้าของไข้ติดตามการรักษาโรคหรือหัตถการ (Clinician continuity)ที่จำเป็นต้องมีการดูแลต่อเนื่อง เช่นโรคปริทนต์อักเสบ การติดตามหลังการใส่ฟันเทียม ฯลฯ รวมถึงการนัดติดตามดูแลต่อเนื่องเพื่อคงสภาพสุขภาพช่องปากเป็นระยะ (Periodic recall) หรือประสานข้อมูลและบันทึกการดูแล รักษา เมื่อต้องส่งตัวผู้ป่วยไปมาระหว่างทันตแพทย์ หรือระหว่างหน่วยบริการ (record continuity)	55. ทันตแพทย์นัดหมายเพื่อมารับการรักษาหรือติดตามการรักษาอย่างต่อเนื่อง ตามความจำเป็น	cn1.58	✓	
	56. ถ้ามีการเปลี่ยนทันตแพทย์อีกคนหนึ่งของที่นี่มาให้การรักษาต่อ ทันตแพทย์คนใหม่สามารถรักษาต่อเนื่องไปได้อย่างราบรื่น ถ้าไม่มี) (ประสบการณ์นี้ให้ คาดการณ์และให้คะแนน	cn2.59	✓	
	57. เมื่อรักษาโรค หรืออาการที่มีหายแล้ว ทันตแพทย์แนะนำให้กลับมาตรวจเช็คสุขภาพช่องปาก อย่างสม่ำเสมอ	cn3.60	✓	
12.การเข้าถึงบริการ (Accessible)	**พฤติกรรมของท่านหรือสิ่งที่ท่านคำนึงถึงหรือรับรู้ได้ขณะให้บริการผู้ป่วย**	**Item ID**	**พัฒนาโดยผู้วิจัย**	**แปลและปรับจาก**
หมายถึง การจัดการเรื่องความง่ายและสะดวกในการได้รับบริการทันตกรรม ที่รวดเร็ว ครบตามชนิดงานที่จำเป็นต้องได้รับบริการ โดยในที่นี้มุ่งเน้นที่บทบาทของทันต์แพทย์ในการจัดการ**เรื่องนี้**	58. ทันตแพทย์มาให้บริการตรงเวลา ทำให้ข้าพเจ้าได้รับบริการตรงเวลานัด	ac1.63	✓	
	59. ข้าพเจ้าได้รับการเลื่อนนัดบ่อย เพราะทันตแพทย์ไม่พร้อมให้บริการ	ac2.64	✓	
	60. ข้าพเจ้าได้รับบริการครบทุกอย่างตามที่ข้าพเจ้าและทันตแพทย์ตรวจพบและตกลงร่วมกัน	ac3.65	✓	
	61. ข้าพเจ้าพบว่า การขอพบหรือนัดหมายทันตแพทย์เป็นเรื่องยาก	ac4.66	✓	

Appendix B-2

Initial 66-Item of PCCDS-D version based on 12 operation definitions and some existing instruments.

1.การดูแลผู้ป่วยแบบองค์รวม (Whole person/ holistic)	พฤติกรรมของท่านหรือสิ่งที่ท่านคำนึงถึงหรือรับรู้ได้ขณะให้บริการผู้ป่วย	Item ID	พัฒนาโดยผู้วิจัย	แปลและปรับจาก
หมายถึง การให้บริการผู้ป่วยโดย คำนึงถึงสภาวะสุขภาพทางกาย ทางจิตใจ สภาพความเป็นตัวตนที่แท้จริงของผู้ป่วยซึ่งมีสภาวะโรคที่แตกต่างกันไป มีความชอบ มีความสนใจ และให้คุณค่าในประเด็นที่เกี่ยวข้องกับการดูแลรักษาแตกต่างกันไป, คำนึงถึงบริบทและอิทธิพลของครอบครัว และชุมชนที่อยู่อาศัย การศึกษา ศาสนา เชื้อชาติ อาชีพ การดำเนินชีวิต กิจวัตร สิ่งแวดล้อม รวมไปถึงสังคมและวัฒนธรรมที่ส่งผลต่อชีวิตความเป็นอยู่ของผู้ป่วยและญาติ โดยนำข้อมูลเหล่านี้มาประกอบการดูแลผู้ป่วย การพิจารณาวิธีการรักษา	1. ท่านสอบถามถึงการใช้ชีวิต ทั่วๆไป เช่น บ้านอยู่ที่ไหน การทำงาน การศึกษา ครอบครัว เพื่อนๆ การดำเนินชีวิตทั่วไปของผู้ป่วย	wp1.1		Naorungroj et al., 2018
	2. ท่านเปิดโอกาสให้ผู้ป่วยได้บอกอาการสำคัญ)Chief complaint) ความต้องการ หรือความคิดเห็น เกี่ยวกับสุขภาพปากและฟัน	wp2.2		Naorungroj et al., 2018
	3. ท่านตอบสนองต่ออาการสำคัญ)Chief complaint) ความต้องการและความคิดเห็นเกี่ยวกับสุขภาพปากและฟันของผู้ป่วย โดยยังยึดหลักการทางทันตกรรม	wp3.3		Naorungroj et al., 2018
	4. ท่านสอบถามถึงปัญหา ข้อจำกัด หรืออุปสรรค ที่เกี่ยวข้องกับกระบวนการในการรักษาของผู้ป่วย เช่น โรคประจำตัว การมี	wp4.4		Naorungroj et al.,

	เวลาจำกัด ค่าใช้จ่าย การเดินทาง			2018
	5. ท่านนำข้อจำกัดต่างๆ ของผู้ป่วย เช่น โรคประจำตัว เวลาที่มีจำกัด ค่าใช้จ่าย การเดินทาง มาพิจารณาในการวางแผนการรักษา	wp5.5		Naorungroj et al., 2018
	6. ท่านให้บริการผู้ป่วยด้วยท่าทีรีบร้อน	wp6.6		Hurst YK et al., 2004
2.การค้นหาโรคและความเจ็บป่วยที่แท้จริง (Disease and illness)	**พฤติกรรมของท่านหรือสิ่งที่ท่านคำนึงถึงหรือรับรู้ได้ขณะให้บริการผู้ป่วย**	**Item ID**	**พัฒนาโดยผู้วิจัย**	**แปลและปรับจาก**
หมายถึง ทันตแพทย์สามารถประเมินความคิดและการรับรู้ของผู้ป่วยต่อภาวะสุขภาพที่ดี สภาวะสุขภาพในปัจจุบัน ความเจ็บป่วยหรือโรคที่เกิดขึ้น และประสบการณ์การเจ็บป่วยในอดีต สามารถค้นหาประสบการณ์ต่อความเจ็บป่วย (illness) ด้วยเทคนิค IFFE ได้แก่ Idea เป็นการประเมินความคิดความเข้าใจเกี่ยวกับโรคที่เกิดขึ้น โดยควรพิจารณาในประเด็นที่มาและความถูกต้องของความคิดความเข้าใจเกี่ยวกับโรค, Feeling เป็นการประเมินความรู้สึกของผู้ป่วยต่อความ	7. ในกรณีจำเป็นบางเคส ท่านได้พยายามสืบค้นถึง สาเหตุของการเจ็บป่วย ไม่เพียงแต่ ตรวจในช่องปากแต่สอบถามถึงสาเหตุอื่นๆ ร่วมด้วย เช่น ลักษณะการกิน การเคี้ยว ภาวะทางจิตใจ ความเครียด อุปนิสัยอื่นๆ ที่เกี่ยวข้อง	di1.7	✓	
	8. ท่านสามารถตรวจวินิจฉัยโรค เพื่อค้นหาสาเหตุการเจ็บป่วยได้อย่างเหมาะสม	di2.8	✓	
	9. เมื่อมีกรณีจำเป็นบางเคส ท่านได้สอบถามลึกลงไปถึงความกังวล ความไม่สบายใจ ต่อความเจ็บป่วยในช่องปากของผู้ป่วย	di3.9	✓	

เจ็บป่วยที่เกิดขึ้น โดยควรพิจารณาในประเด็นที่มาและความเหมาะสมของความรู้สึกที่เกิดขึ้นต่อความเจ็บป่วยร่วมด้วย, Function เป็นการประเมินผลกระทบต่อชีวิตของผู้ป่วย ทั้งในด้านการดำเนินชีวิตประจำวัน การทำงาน ครอบครัว และสังคม ที่เกิดขึ้นจากความเจ็บป่วย และ Expectation เป็นการประเมินความคาดหวังของผู้ป่วยที่มีตต่อการรักษาจากทันตแพทย์ และต่อการดำเนินไปของโรค	10. ท่านสอบถามถึงผลของการเจ็บป่วยในช่องปากต่อการดำเนินชีวิตประจำวัน หรือ การทำงาน หรือการเรียนของผู้ป่วย	di4.10	✓	
	11. ท่านสอบถามถึงความคาดหวังของผู้ป่วยต่อการมารับการรักษาครั้งนี้	di5.11	✓	
3. การให้และรับรู้ข้อมูลการเจ็บป่วย และร่วมการตัดสินใจในการดูแลรักษาร่วมกับผู้ป่วยและญาติ (Shared information and decision making)	**พฤติกรรมของท่านหรือสิ่งที่ท่านคำนึงถึงหรือรับรู้ได้ขณะให้บริการผู้ป่วย**	Item ID	**พัฒนาโดยผู้วิจัย**	**แปลและปรับจาก**
หมายถึง เมื่อรวบรวมข้อมูลความเจ็บป่วยและการวินิจฉัยโรคได้แล้ว ทันตแพทย์ต้องกำหนดความสำคัญของปัญหาต่างๆ ตั้งเป้าหมายและวางแผนการรักษา โดยการให้ข้อมูลที่ครบถ้วนเหมาะสม ทั้งแผนการรักษา ทางเลือกในการรักษา และค่าใช้จ่ายในการรักษา โดยส่งเสริมการร่วมกันตัดสินใจในทางเลือกการรักษา การดูแล ทั้งระหว่างและภายหลังการรักษา ร่วมกันระหว่างทันตแพทย์และผู้ป่วย/ญาติ, เปิดโอกาส	12. ท่านได้อธิบายและแสดงให้เห็นว่าผลการรักษาที่จะเกิดขึ้นนั้นเป็นผลของการร่วมมือกันในการดูแลตัวเองของผู้ป่วย และรักษาของท่าน	sd1.12	✓	
	13. ท่านได้ให้ผู้ป่วยมีส่วนร่วมในการตัดสินใจ ในการเลือกการรักษาที่เหมาะสมกับผู้ป่วย	sd2.13		Naorungroj et al., 2018
	14. ท่านเปิดโอกาสให้ผู้ป่วยได้ร่วมกำหนดเป้าหมายการรักษาร่วมกันกับท่าน	sd3.14	✓	

ในการซักถามจนเข้าใจถึงแผนและทางเลือกในการรักษา ถึงข้อดีและข้อเสียของทางเลือกการรักษาต่างๆ รวมทั้งแผนการดูแลต่อเนื่อง ด้วย	15. ท่านได้อธิบายแผนและขั้นตอนการรักษา รวมถึงระยะเวลารักษาอย่างละเอียด	sd4.15		Naorungroj et al., 2018
	16. ท่านได้อธิบายถึง ข้อดี ข้อเสีย ค่าใช้จ่าย ทางเลือกในการรักษา ผลที่อาจเป็นไปได้ของการรักษา	sd5.16		Naorungroj et al., 2018
	17. วิธีการรักษาที่ท่านเลือกให้กับผู้ป่วยนั้น เป็นวิธีที่ดีที่สุด ง่าย หรือเหมาะสมที่สุดสำหรับตัวท่านเอง มากกว่าสำหรับผู้ป่วย	sd7.17		Armfield JM et al., 20172009
4. การสร้างความสัมพันธ์ที่ดีและเหมาะสมระหว่างท่านกับผู้ป่วยและญาติ (Dentist-patient relationship)	**พฤติกรรมของท่านหรือสิ่งที่ท่านคำนึงถึงหรือรับรู้ได้ขณะให้บริการผู้ป่วย**	**Item ID**	**พัฒนาโดยผู้วิจัย**	**แปลและปรับจาก**
หมายถึง ความสัมพันธ์ที่ดีระหว่างทันตแพทย์กับผู้ป่วยและญาติที่เป็นประโยชน์ต่อการรักษา และทำให้พัฒนาศักยภาพในการดูแลตนเองของผู้ป่วยได้ ทันตแพทย์แสดงออกถึงการเคารพในความเป็นคนที่เท่าเทียมกัน การให้เกียรติ เคารพใน	18. ท่านให้การดูแลผู้ป่วยด้วยความเคารพในศักดิ์ศรี ท่านมิได้มองเพียงปาก และฟัน ที่เป็นเพียงอวัยวะหนึ่งที่ไม่มีจิตใจ	dp1.18		CAHPS dental plan survey, 2009
	19. การมองผู้ป่วยด้วยความเป็นมนุษย์หรือความเป็นคนที่เท่าเทียมกัน ถือเป็นหลักที่ท่านคำนึงถึงสูงสุดเมื่อให้บริการผู้ป่วย	dp2.19	✓	

ความแตกต่าง ซื่อสัตย์ เคารพสิทธิผู้ป่วย รักษาความลับ ใส่ใจในการดูแล การควบคุมระดับหรือระยะความสัมพันธ์ที่เหมาะสมไม่ก้าวก่ายหรือห่างเหินเกินไป และเป็นความสัมพันธ์แห่งความไว้วางใจ ไว้เนื้อเชื่อใจ ซึ่งกันและกัน	20. ท่านแสดงท่าที รังเกียจ หรือไม่สบายใจ เมื่อต้องให้การรักษาแก่ ผู้ป่วยที่มีความแตกต่างกัน เช่น ฐานะ สภาพพิการ การแต่งกาย ความสะอาดสะอ้านของ ผู้ป่วย	dp3.20	✓	
	21. ท่าทีในการดูแลรักษาผู้ป่วยของท่านแตกต่างกันเมื่อ ผู้ป่วย มีสิทธิการรักษาที่ต่างกัน	dp4.21	✓	
	22. ท่านแสดงให้ผู้ป่วยไว้วงใจในตัวท่าน	dp5.22		Armfield JM et al., 2017
	23. ท่านหลีกเลี่ยงที่จะให้บริการผู้ป่วยที่ท่านทราบว่าเป็นผู้ป่วยที่รับมือยาก เช่น คุณป้าที่อธิบายยากกว่าจะเข้าใจ ผู้ป่วยที่มีเรื่องถามแล้วถามอีกซ้ำๆ แม้ตอบไปแล้ว ผู้ป่วยที่มีประวัติเปลี่ยนหมอไปเรื่อย ๆ ผู้ป่วยที่มีอารมณ์แปรปรวน เป็นต้น	dp6.23	✓	
	24. ท่านเอาใจใส่ในการดูแลสุขภาพปากและฟันของผู้ป่วย	dp7.24	✓	
	25. ท่านได้เสริมพลัง สอนหรือแนะนำ จนมั่นใจว่าผู้ป่วยจะสามารถดูแลสุขภาพช่องปากของตนเองได้เองอย่างเหมาะสม	dp8.25		Naorungroj et al., 2018
	26. ท่านให้บริการด้วยความซื่อสัตย์	dp9.26	✓	
5. การเท่าทันและตระหนักรู้ในตัวตน รวมทั้งรับรู้ว่าตัวทันต	**พฤติกรรมของท่านหรือสิ่งที่ท่านคำนึงถึงหรือรับรู้ได้ขณะ**	**Item ID**	**พัฒนา**	**แปลและปรับจาก**

แทพย์เองก็เป็นมนุษย์คนหนึ่ง (Dentist self-awareness)	ให้บริการผู้ป่วย		โดยผู้วิจัย	
หมายถึง ความสามารถจัดการต่ออารมณ์ความรู้สึกของตนเองได้ ไม่เข้าไปเป็นส่วนหนึ่งของอารมณ์ทางลบหรือบวกของผู้ป่วยมากเกินไป และตระหนักว่าตนเองก็เป็นปุถุชนที่สามารถมีอารมณ์ความรู้สึกต่างๆ ได้ รู้เท่าทันและสามารถจัดการกับความรู้สึกของตนเองได้อย่างเหมาะสมเมื่อต้องเผชิญกับสถานการณ์ต่างๆ ใน ผู้ป่วยแต่ละราย ซึ่งจะส่งผลให้การบริการได้อย่างเหมาะสมกับผู้ป่วยแต่ละราย	27. ท่านอารมณ์ดี และรู้สึกสบายใจ ขณะให้บริการ	sa1.27		Hurst YK et al., 2004
	28. ท่านแสดงอารมณ์ไม่พอใจใส่ผู้ป่วย เช่น การดุเสียงดัง	sa2.28	✓	
	29. ท่านบ่น หรือดุเสียงดัง ใส่ผู้ช่วย หรือ เจ้าหน้าที่	sa3.29	✓	
	30. อารมณ์ที่ดี หรือไม่ดีของท่านสามารถส่งผลต่อท่าทีในขณะให้บริการผู้ป่วย	sa4.30	✓	
	31. เมื่อท่านเริ่มหงุดหงิด หรือโมโห ผู้ช่วย เจ้าหน้าที่ หรือผู้ป่วย ท่านสามารถจัดการกับอารมณ์ของตนเอง จนทำให้ไม่ส่งผลต่อการบริการของท่าน	sa5.31	✓	
6.ความเห็นอกเห็นใจ (Empathy)	**พฤติกรรมของท่านหรือสิ่งที่ท่านคำนึงถึงหรือรับรู้ได้ขณะให้บริการผู้ป่วย**	**Item ID**	**พัฒนาโดยผู้วิจัย**	**แปลและปรับจาก**
หมายถึง ทันตแพทย์สามารถเข้าใจในความรู้สึกของผู้ป่วย ร่วมรับรู้หรือร่วมรู้สึกต่อความเจ็บป่วย หรือปัญหาสุขภาพช่องปากเช่นเดียวกับที่ผู้ป่วยรู้สึก มองชีวิตหรือความเจ็บป่วยใน	32. ท่านแสดงท่าทีที่เห็นอกเห็นใจผู้ป่วย	em1.32	✓	
	33. เมื่อผู้ป่วยเล่าประวัติความเจ็บป่วย ความกังวล ความคิดเห็นต่อการเจ็บป่วยของเขาให้ท่านทราบ ท่านเข้าใจและมองเห็นความ	em2.33		Hojat et al, 2009

มุมมองเดี่ยวกับผู้ป่วย ดูแลผู้ป่วยด้วยความเมตตา และเห็นใจผู้ป่วย	เจ็บป่วย หรือความกังวลได้ในมุมมองเดียวกับผู้ป่วย			
	34. แม้ท่านจะรับรู้ต่อความรู้สึก หรือความกังวล หรือไม่สบายใจที่เกี่ยวข้องกับสุขภาพช่องปากของผู้ป่วย ก็ไม่เป็นประโยชน์ต่อการดูแลรักษา	em3.34	✓	
	35. ท่านมีความอดทนและใจเย็น แม้มีความยุ่งยากในการให้การดูแลรักษาผู้ป่วย	em4.35	✓	
	36. ภายหลังการทำฟัน ท่านได้สอบถาม หรือเปิดโอกาสให้ผู้ป่วยบอกเล่าความรู้สึก ความคิดเห็นต่อการรักษา	em5.36		Hojat et al, 2009
	37. เมื่อท่านฟังการเล่าประวัติความเจ็บป่วย ความกังวล ความคิดเห็นต่อการเจ็บป่วยของผู้ป่วยแล้ว ท่านเข้าใจและมองเห็นความเจ็บป่วยได้ในมุมมองเดียวกับผู้ป่วย	em6.37		Hojat et al, 2009
7.การจัดการความเจ็บปวดและความกังวลหรือกลัวการทำฟัน (Pain and dental anxiety management)	**พฤติกรรมของท่านหรือสิ่งที่ท่านคำนึงถึงหรือรับรู้ได้ขณะให้บริการผู้ป่วย**	Item ID	**พัฒนาโดยผู้วิจัย**	**แปลและปรับจาก**
หมายถึง ความสามารถในการให้บริการหรือทำหัตถการได้อย่างนุ่มนวล คำนึงถึงความรู้สึกเจ็บปวดของผู้ป่วย สามารถจัดการภาวะกลัวหรือวิตกกังวลในการทำฟันได้อย่างเหมาะสมสำหรับผู้ป่วยที่แตกต่างกัน	38. เมื่อพบว่าผู้ป่วยมีความกังวลต่อการทำฟัน ท่านพูดคุยกับผู้ป่วยเพื่อให้คลายกังวล และ สบายใจขึ้นก่อนที่จะทำฟัน	an1.38	✓	
	39. ท่านเตือนทุกครั้ง ก่อนที่ท่านจะลงมือทำฟันที่อาจทำให้ผู้ป่วยเจ็บหรือเสียวมาก เช่น เริ่มฉีดยาชา เริ่มกรอฟัน เมื่อจะงัดฟันแรงๆ หรือขยับเก้าอี้ทำฟันขึ้นลงเร็วๆ เป็นต้น	an2.39		Hurst YK et al., 2004

	40. ท่านได้สอบถามความรู้สึกเจ็บปวด ขณะให้บริการทำฟันอยู่เป็นระยะๆ	an3.40		Naorungroj et al., 2018
	41. แม้ผู้ป่วยจะร้องว่าเจ็บหรือเสียวมาก ท่านก็ไม่หยุด หรือพักการทำหัตถการ เพราะอยากให้งานเสร็จ	an4.41	✓	
8. การสื่อสาร (Communication)	**พฤติกรรมของท่านหรือสิ่งที่ท่านคำนึงถึงหรือรับรู้ได้ขณะให้บริการผู้ป่วย**	**Item ID**	**พัฒนาโดยผู้วิจัย**	**แปลและปรับจาก**
หมายถึง ทันตแพทย์สามารถสื่อสารที่ยึดผู้ป่วยเป็นศูนย์กลาง โดยเป็นการสื่อสารกับผู้ป่วยและ/หรือญาติ การกล่าวทักทายและแนะนำตนเอง การพูดด้วยภาษาที่เข้าใจง่าย, การฟังอย่างตั้งใจ ลึกซึ้ง, ให้เวลาอย่างเพียงพอต่อการสนทนากับผู้ป่วยและญาติ, สามารถสื่อสารได้เหมาะสมทั้งคำพูดและท่าที, ใช้สื่อประกอบการอธิบาย, สามารถทวนสอบและสะท้อนกลับความเข้าใจที่ได้จากการสนทนาได้อย่างเหมาะสม	42. ท่าน มักกล่าวทักทาย หรือเอ่ยชื่อทักทายผู้ป่วย อย่างเป็นมิตร	co1.42		Hurst YK et al., 2004
	43. ท่านให้เวลาผู้ป่วยอย่างเพียงพอในการเล่าอาการ และประวัติความเจ็บป่วย	co2.43		Naorungroj et al., 2018
	44. ท่านตั้งใจฟัง สบตา มองผู้ป่วย มากกว่ามองเอกสารหรือจอคอมพิวเตอร์ และแสดงท่าทีสนใจในคำบอกเล่าของผู้ป่วย	co3.44	✓	

	45. ท่านอธิบาย หรือพูดคุย ด้วยภาษาที่เข้าใจได้ง่าย ไม่ใช้ศัพท์ทางการแพทย์มากเกินไป	co4.45		CAHPS dental plan survey, 2009
	46. ท่านมักพูดเร่งรัดหรือตัดบท ขณะที่ผู้ป่วยกำลังเล่าและอธิบายรายละเอียดถึงอาการ ความเจ็บป่วย	co5.46	✓	
	47. ท่านใช้อุปกรณ์หรือสื่อต่างๆ เช่นแผ่นพับ รูปภาพ โมเดล วิดีโอคลิป หรือให้ดูฟิล์มเอ็กซเรย์ ประกอบการวินิจฉัย การรักษา หรือการให้คำแนะนำต่างๆ ทั้งก่อนและหลังการรักษา	co6.47		Naorungroj et al., 2018
	48. เมื่ออธิบายการวินิจฉัย แผนการรักษา คำแนะนำต่างๆ แล้ว ท่านสอบถามผู้ป่วยอีกครั้งว่ามีข้อสงสัย มีคำถาม หรือไม่เข้าใจจุดไหน	co7.48		Naorungroj et al., 2018
	49. เมื่อสังเกตเห็นท่าที และ อวจนภาษาของผู้ป่วย ที่แสดงออกถึงความอึดอัดหรือกังวล หรือสงสัย หรืออื่นๆ ท่านตอบสนองอย่างเหมาะสม เช่น ท่านพูดให้คลายกังวล หรือทวนสอบความเข้าใจสิ่งที่อธิบาย	co8.49	✓	
9. การดูแลแบบผสมผสาน (Comprehensive)	**พฤติกรรมของท่านหรือสิ่งที่ท่านคำนึงถึงหรือรับรู้ได้ขณะให้บริการผู้ป่วย**	**Item ID**	**พัฒนาโดย**	**แปลและปรับจาก**

			ผู้วิจัย	
หมายถึง ทันตแพทย์ให้บริการดูแลรักษาโรคในช่องปากเพื่อคงสภาพช่องปากที่ดีตลอดเวลา รวมถึงแสวงหาวิธีการในการส่งเสริมสุขภาพ ป้องกันโรค และฟื้นฟูจากการเจ็บป่วย ได้อย่างเหมาะสม ครอบคลุมปัญหาสุขภาพช่องปากส่วนใหญ่ ทั้งฟัน เหงือก และเนื้อเยื่อต่างๆ ในช่องปาก และดูแลตลอดทุกช่วงวัยของผู้ป่วย รวมทั้งสามารถให้การรักษาโดยคำนึงและเชื่อมโยงกับโรคอื่นๆ ทางระบบอย่างสมเหตุสมผล	50. ท่านตรวจสุขภาพช่องปากส่วนอื่นๆ ทั้งปาก นอกเหนือจากปัญหาหลักที่ผู้ป่วยมาพบท่าน	cp1.50	✓	
	51. ท่านได้แนะนำวิธีการดูแลสุขภาพปากและฟัน เช่น วิธีแปรงฟัน วิธีใช้ไหมขัดฟัน ยาสีฟันที่เหมาะสม อาหารที่ควรหลีกเลี่ยง เป็นต้น	cp2.51		Naorungroj et al., 2018
	52. ท่านตรวจช่องปากเฉพาะบริเวณฟันหรือเหงือกตำแหน่งที่ผู้ป่วยมีปัญหาเท่านั้น ไม่ตรวจทั้งปาก	cp3.52	✓	
	53. เมื่อผู้ป่วยมีโรคทางระบบที่เกี่ยวข้องกับสุขภาพช่องปาก ท่านอธิบายให้ผู้ป่วยเข้าใจว่าโรคเหล่านั้นเชื่อมโยงกับสุขภาพปากและฟัน	cp4.53	✓	
10.การประสานการทำงาน (Coordinated)	**พฤติกรรมของท่านหรือสิ่งที่ท่านคำนึงถึงหรือรับรู้ได้ขณะให้บริการผู้ป่วย**	**Item ID**	**พัฒนาโดยผู้วิจัย**	**แปลและปรับจาก**
หมายถึง บทบาทของทันตแพทย์ในการทำงานประสานกัน	54. การประสานงานระหว่างท่านกับทันตแพทย์ท่านอื่นๆ หรือกับเจ้าหน้าที่ในแผนกทันตกรรม มีความราบรื่น สะดวกสบาย	co1.54	✓	

ระหว่างทันตแพทย์เจ้าของไข้กับทันตแพทย์คนอื่น ทั้งที่หน่วยบริการเดียวกันหรือต่างหน่วยบริการ หรือประสานกับผู้ช่วยและเจ้าหน้าที่ต่างๆในแผนกทันตกรรมเอง หรือประสานกับบุคลากรอื่นๆระหว่างแผนกในหน่วยบริการเดียวกันได้อย่างราบรื่น โดยคำนึงถึงผู้ป่วยเป็นหลัก	รวดเร็ว			
	55. ท่านรู้สึกอึดอัด หรือเกรงใจ ที่จะต้องส่งต่อผู้ป่วยไปให้ทันตแพทย์ท่านอื่นในแผนก/ฝ่าย	co2.55	✓	
	56. เมื่อมีกรณีจำเป็น ที่ต้องประสานงานกับแผนกอื่นๆ ท่านมีความพยายามในการประสานเพื่อให้ผู้ป่วยได้รับการดูแลที่ดีที่สุด ด้วยยึดหลักผู้ป่วยเป็นศูนย์กลาง แม้บางครั้งไม่ได้ทำตามแนวทางที่กำหนดไว้บ้าง	co3.56	✓	
	57. ท่านทำงานประสานกับคนอื่นๆ ด้วยคำนึงถึงการมุ่งเน้นผู้ป่วยเป็นศูนย์กลาง	co4.57	✓	
11. การดูแลผู้ป่วยได้อย่างต่อเนื่อง (Continuous)	**พฤติกรรมของท่านหรือสิ่งที่ท่านคำนึงถึงหรือรับรู้ได้ขณะให้บริการผู้ป่วย**	**Item ID**	**พัฒนาโดยผู้วิจัย**	**แปลและปรับจาก**
หมายถึง ทันตแพทย์เจ้าของไข้ติดตามการรักษาโรคหรือหัตถการ (Clinician continuity)ที่จำเป็นต้องมีการดูแลต่อเนื่อง เช่นโรคปริทนต์อักเสบ การติดตามหลังการใส่ฟันเทียม ฯลฯ รวมถึงการนัดติดตามดูแลต่อเนื่องเพื่อคงสภาพสุขภาพช่องปากเป็นระยะ (Periodic recall) หรือประสานข้อมูลและบันทึกการดูแล รักษา เมื่อต้องส่งตัวผู้ป่วยไปมา	58. ท่านนัดหมายผู้ป่วยเพื่อมารับการรักษาอย่างต่อเนื่อง หรือติดตามการรักษาตามความจำเป็นของโรคหรือหัตถการ	cn1.58	✓	
	59. เมื่อต้องส่งต่อผู้ป่วยไปรับการรักษาต่อกับทันตแพทย์ท่านอื่นทั้งในและนอกหน่วยงาน ท่านจะบันทึกข้อมูลอย่างละเอียด เตรียมเอกสารที่จำเป็น เช่น การระบุตำแหน่งที่ชัดเจน การวาดรูปประกอบ ฟิลม์หรือไฟล์ x-ray, โมเดลฟัน เป็นต้น	cn2.59	✓	

ระหว่างทันตแพทย์ หรือระหว่างหน่วยบริการ (record continuity)				
	60. เมื่อรักษาตามขั้นตอนของงานทันตกรรมต่างๆ เรียบร้อยแล้ว ท่านแนะนำให้ผู้ป่วย กลับมาตรวจเช็คสุขภาพช่องปากเป็นระยะๆ	cn3.60	✓	
	61. ผู้ป่วยที่อยู่ในพื้นที่รับผิดชอบ อำเภอ หรือตำบล หรือ) Catchment area ของท่าน (เมื่อมีการส่งต่อผู้ป่วยไปรับการรักษาที่หน่วยบริการอื่น โดยทั่วไปแล้ว ท่าน<u>ไม่ได้</u> ติดตามว่าผู้ป่วยได้รับบริการตามที่ท่านส่งต่อไป หรือไม่	cn4.61	✓	
	62. ผู้ป่วยที่อยู่ในพื้นที่รับผิดชอบ อำเภอ หรือตำบล หรือ) Catchment area ของท่าน (เมื่อมีการส่งต่อผู้ป่วยไปรับการรักษาที่หน่วยบริการอื่น และถ้ามีแผนการรักษาว่าต้องมีการกลับมารักษากับท่านอีก ท่านจะเตรียมการวางแผน และ ติดตามเพื่อกลับมารักษากับท่านอย่างเรียบร้อย	cn5.62	✓	
12.การเข้าถึงบริการ (Accessible)	**พฤติกรรมของท่านหรือสิ่งที่ท่านคำนึงถึงหรือรับรู้ได้ขณะให้บริการผู้ป่วย**	**Item ID**	**พัฒนาโดยผู้วิจัย**	**แปลและปรับจาก**
หมายถึง การจัดการเรื่องความง่ายและสะดวกในการได้รับบริการทันตกรรม ที่รวดเร็ว ครบตามชนิดงานที่จำเป็นต้องได้รับบริการ โดยในที่นี้มุ่งเน้นที่บทบาทของทันต์แพทย์ในการ	63. ผู้ป่วยของท่านรอทำฟันนาน หรือได้รับบริการไม่ตรงตามเวลานัด	ac1.63	✓	
	64. ท่านเลื่อนนัดผู้ป่วยบ่อย	ac2.64	✓	

จัดการ**เรื่องนี้**	65. ท่านให้บริการผู้ป่วยได้ครบชนิดงาน ตามความจำเป็นที่ตกลงและแจ้งผู้ป่วยไว้ ในครั้งนั้นๆ	ac3.65	✓	
	66. เมื่อผู้ป่วยมีความจำเป็นต้องพบท่าน ท่านให้ผู้ป่วยเข้าถึงหรือขอพบท่านได้สะดวก	ac4.66	✓	

Appendix C-1

Patient perception of patient-centered care of dentist in primary care questionnaires (Preliminary)

แบบสอบถาม (ฉบับตั้งต้น)

เรื่อง การดูแลผู้ป่วยแบบยึดผู้ป่วยเป็นศูนย์กลางของทันตแพทย์ในหน่วยบริการปฐมภูมิ

(สำหรับผู้รับบริการ)

คำชี้แจง

แบบสอบถามฉบับนี้ประกอบด้วย 2 ส่วนดังนี้

ส่วนที่ 1 ข้อมูลส่วนบุคคล

ส่วนที่ 2 การดูแลผู้ป่วยแบบยึดผู้ป่วยเป็นศูนย์กลางของทันตแพทย์

ส่วนที่ 1 ข้อมูลส่วนบุคคล

คำชี้แจง โปรดขีดเครื่องหมาย ✓ ลงในช่อง ☐ หน้าข้อความ หรือกรอกข้อมูลที่ตรงกับความเป็นจริงของท่าน

1. เพศ ☐ ชาย ☐ หญิง

2. อายุ .....ปี (เกิน 6 เดือนให้นับเป็น 1 ปี)

3. ระดับการศึกษาสูงสุด

☐ ประถมศึกษา ☐ มัธยมศึกษา ☐ ปริญญาตรีหรือสูงกว่า

3. สิทธิการรักษาของท่านคือ

☐ สิทธิเบิกได้ข้าราชการ/จ่ายตรง/ต้นสังกัด/ท้องถิ่น

☐ ประกันสังคม

☐ บัตรประกันสุขภาพถ้วนหน้า (บัตรทอง)

☐ อื่นๆ ระบุ.....

4. โดยเฉลี่ย ในระยะ 2 ปี ท่านมาใช้บริการที่ รพ. หรือ รพ.สต. บ่อยแค่ไหน (ในสภาวะปกติ ไม่คำนึงถึง โรคโควิด-19 ที่ห้ามการเดินทาง)

☐ 2 ครั้ง ☐ ตั้งแต่ 3 ครั้งขึ้นไป

ส่วนที่ 2 การดูแลแบบยึดผู้ป่วยเป็นศูนย์กลางของทันตแพทย์

คำชี้แจง ให้ท่านระบุความความถี่ **<u>พฤติกรรมหรือผลของพฤติกรรมของทันตแพทย์ที่ปฏิบัติต่อท่าน</u>** ตามความเป็นจริง ที่ผ่านมาทุกครั้งและรวมครั้งนี้ เมื่อท่านมารับบริการที่**<u>หน่วยบริการนี้</u>** แบบสอบถามเป็นแบบมาตรวัดประมาณค่า 5 ระดับ ดังนี้

ความถี่ของพฤติกรรมหรือผลของพฤติกรรมของทันตแพทย์ที่ปฏิบัติต่อท่าน
5 หมายถึง ทำมากที่สุดหรือทุกครั้ง (81-100%)
4 หมายถึง ทำบ่อยครั้ง (61-80%)
3 หมายถึง ทำบ้าง (41-60%)
2 หมายถึง ไม่ค่อยได้ทำ (21-40%)
1 หมายถึง ทำน้อยที่สุดหรือไม่ได้ทำ (0-20%)

พฤติกรรมหรือผลของพฤติกรรมของทันตแพทย์ที่ปฏิบัติต่อท่าน	ความถี่พฤติกรรมของทันตแพทย์				
	5	4	3	2	1
1. ทันตแพทย์สอบถามถึงการใช้ชีวิต ทั่วๆไป เช่น บ้านอยู่ที่ไหน การทำงาน การศึกษา ครอบครัว เพื่อนๆ การดำเนินชีวิตทั่วๆไป รวมทั้งศาสนา และความเชื่อ ของข้าพเจ้า					
2. ทันตแพทย์นำข้อมูลทั่วไปของข้าพเจ้า ตามข้อ มา 1 ประกอบในการการดูแลรักษาข้าพเจ้า					
3. ทันตแพทย์ ตอบสนองต่อความต้องการ และความคิดเห็นเกี่ยวกับสุขภาพปากและฟันของข้าพเจ้า					
4. ทันตแพทย์สอบถามถึงปัญหา ข้อจำกัด หรืออุปสรรค ที่เกี่ยวข้องกับกระบวนการในการรักษาฟันของข้าพเจ้า เช่น โรคประจำตัว การมีเวลาจำกัด ค่าใช้จ่าย การเดินทางของข้าพเจ้า					
5. ทันตแพทย์นำข้อจำกัดต่างๆ ของข้าพเจ้า เช่น โรคประจำตัว เวลาที่มีจำกัด ค่าใช้จ่าย การเดินทาง มาพิจารณาในการวางแผนการรักษาข้าพเจ้า					
6. ทันตแพทย์ได้พยายามสืบค้นถึง สาเหตุของการเจ็บป่วยของข้าพเจ้า ไม่เพียงแต่ ตรวจในช่องปากแต่สอบถามถึงสาเหตุอื่นๆ ร่วมด้วย เช่น ภาวะทางจิตใจ ความเครียด อุปนิสัยอื่นๆ ที่เกี่ยวข้อง***					
7. ทันตแพทย์เปิดโอกาสให้ได้เล่าถึงความคิดของข้าพเจ้าเองว่า ป่วยเป็นอะไร					
8. ทันตแพทย์เปิดโอกาสให้ข้าพเจ้าเล่าถึงความรู้สึกกังวลต่อความเจ็บป่วยในช่องปาก					
9. ทันตแพทย์สอบถามถึงผลกระทบของการเจ็บป่วยในช่องปากต่อการดำเนินชีวิตประจำวัน หรือ การทำงาน หรือการเรียนของข้าพเจ้า					
10. ทันตแพทย์เปิดโอกาสให้ข้าพเจ้าได้บอกถึงความคาดหวังต่อการมารับการรักษาครั้งนี้ เช่น คาดว่าจะได้รับฟันปลอมใหม่ที่สวยๆ ไม่แพง เป็นต้น					
11. เพราะการดูแลและอธิบายของทันตแพทย์ทำให้ ข้าพเจ้า					

พฤติกรรมหรือผลของพฤติกรรมของทันตแพทย์ที่ปฏิบัติต่อท่าน	ความถี่พฤติกรรมของทันตแพทย์				
	5	4	3	2	1
ทราบดีว่าผลการรักษาที่จะเกิดขึ้นนั้นเป็นผลของการร่วมมือในการดูแลตัวข้าพเจ้าเอง และทันตแพทย์ที่ให้การรักษา					
12. ทันตแพทย์ให้ข้าพเจ้า) และญาติ ในบางกรณี (มีส่วนร่วมในการตัดสินใจร่วมกัน ในการเลือกการรักษาที่เหมาะสมกับข้าพเจ้า					
13. ทันตแพทย์เปิดโอกาสให้ข้าพเจ้า) และญาติ ในบางกรณี (ได้ร่วมกำหนดเป้าหมายการรักษาร่วมกับทันตแพทย์					
14. ทันตแพทย์ได้อธิบายแผนและขั้นตอนการรักษา รวมถึงระยะเวลารักษาอย่างละเอียด					
15. ทันตแพทย์ได้อธิบายถึง ข้อดี ข้อเสีย ค่าใช้จ่าย ทางเลือกในการรักษา ผลที่อาจเป็นไปได้ของการรักษา					
16. ทันตแพทย์ได้ให้การดูแลข้าพเจ้าด้วยการแสดงออกถึงความเคารพในความเป็นคนที่เท่าเทียมกัน ให้เกียรติ และเคารพในความแตกต่าง***					
17. ข้าพเจ้าไม่เคยกังวลใดๆ เลย เมื่อสุขภาพช่องปากและฟันของข้าพเจ้า มาอยู่ในการดูแลของทันตแพทย์ที่นี่					
18. ทันตแพทย์ทำให้ข้าพเจ้าไว้วางใจในตัวทันตแพทย์					
19. ข้าพเจ้ามั่นใจว่าจะสามารถดูแล รักษาสุขภาพช่องปากของข้าพเจ้าได้เองอย่างเหมาะสม เมื่อได้รับการดูแลจากทันตแพทย์ที่นี่					
20. ทันตแพทย์ดูแลข้าพเจ้าดี ทำให้ข้าพเจ้าจะกลับมารักษาที่นี่เป็นประจำ					
21. ทันตแพทย์มีอารมณ์ปกติดี และกระตือรือร้นขณะให้บริการข้าพเจ้า					
22. ทันตแพทย์สามารถจัดการกับอารมณ์ของตนเองได้ดี แม้ในสถานการณ์ที่ยุ่งยากเกี่ยวกับการดูแลข้าพเจ้า หรือผู้ป่วยคนอื่นๆ					
23. เมื่อข้าพเจ้าเล่าประวัติความเจ็บป่วย ความกังวล ความ					

พฤติกรรมหรือผลของพฤติกรรมของทันตแพทย์ที่ปฏิบัติต่อท่าน	ความถี่พฤติกรรมของทันตแพทย์				
	5	4	3	2	1
คิดเห็นต่อการเจ็บป่วยของข้าพเจ้าให้ทันตแพทย์ทราบ ข้าพเจ้าคิดว่าทันตแพทย์เข้าใจและมองเห็นความเจ็บป่วยได้ในมุมมองเดียวกับข้าพเจ้า					
24. ทันตแพทย์แสดงความรู้สึกเห็นอกเห็นใจต่อข้าพเจ้าอย่างชัดเจน แม้วิธีการหรือขั้นตอนในการดูแลรักษาข้าพเจ้า จะยุ่งยากซับซ้อน					
25. ภายหลังการทำฟัน ทันตแพทย์ได้สอบถาม หรือเปิดโอกาสให้ข้าพเจ้าบอกเล่าความรู้สึก ความคิดเห็นต่อการรักษา					
26. ทันตแพทย์พูดคุยกับข้าพเจ้า เพื่อให้ข้าพเจ้าคลายกังวล และ สบายใจขึ้นก่อนที่จะทำฟัน****					
27. ข้าพเจ้าจะได้รับการเตือนทุกครั้ง ก่อนที่ทันตแพทย์จะลงมือทำฟันที่อาจทำให้ข้าพเจ้าเจ็บหรือเสียวมาก เช่น เริ่มฉีดยาชา เริ่มกรอฟัน เมื่อจะงัดฟันแรงๆ หรือขยับเก้าอี้ทำฟันขึ้นลงเร็วๆ เป็นต้น					
28. ข้าพเจ้าได้รับการสอบถามความรู้สึกเจ็บปวดจากทันตแพทย์ ขณะให้บริการทำฟันอยู่เป็นระยะๆ					
29. ทันตแพทย์ มักกล่าวทักทาย อย่างเป็นมิตร					
30. ทันตแพทย์ให้เวลาข้าพเจ้าอย่างเพียงพอในการเล่าอาการและประวัติความเจ็บป่วย					
31. ทันตแพทย์ตั้งใจฟัง สบตา และมองข้าพเจ้า มากกว่ามองเอกสารหรือจอคอมพิวเตอร์ และแสดงท่าทีสนใจในคำบอกเล่าอาการของข้าพเจ้า					
32. ทันตแพทย์อธิบาย หรือพูดคุย ด้วยภาษาที่เข้าใจได้ง่าย ไม่ใช้ศัพท์ทางการแพทย์มากเกินไป					
33. ทันตแพทย์ใช้อุปกรณ์ หรือสื่อต่างๆ เช่นแผ่นพับ รูปภาพ วิดีโอ หรือให้ดูฟิล์ม เอ็กซเรย์ ประกอบการวินิจฉัย การรักษาโรค หรือการให้คำแนะนำต่างๆ หลังการรักษา					

พฤติกรรมหรือผลของพฤติกรรมของทันตแพทย์ที่ปฏิบัติต่อท่าน	ความถี่พฤติกรรมของทันตแพทย์				
	5	4	3	2	1
34. ทันตแพทย์สอบถามข้าพเจ้าว่ามีข้อสงสัย มีคำถาม หรือไม่เข้าใจจุดไหน					
35. ทันตแพทย์ตรวจช่องปากครอบคลุมทุกส่วนในช่องปากเพื่อเป็นการประเมินสุขภาพช่องปากและฟันให้ข้าพเจ้า ไม่เฉพาะบริเวณฟันหรือเหงือกตำแหน่งที่ข้าพเจ้ามีปัญหาเท่านั้น					
36. เพราะทันตแพทย์อธิบายข้าพเจ้าจึงเข้าใจว่า สุขภาพปากและฟันของข้าพเจ้าเชื่อมโยงกับสุขภาพทางกาย					
37. ข้าพเจ้าสนใจที่จะดูแลรักษาสุขภาพช่องปากของตนเองมากขึ้น เมื่อมารับบริการที่นี่ เพราะทันตแพทย์แนะนำ เช่น ข้าพเจ้าแปรงฟันด้วยยาสีฟันผสมฟลูออไรด์สม่ำเสมอ และก่อนนอนข้าพเจ้าลดการบริโภคอาหาร , หวาน น้ำอัดลม ลูกอมต่างๆ					
38. การประสานงานระหว่างทันตแพทย์ กับทันตแพทย์ด้วยกัน หรือกับเจ้าหน้าที่ในแผนกทันตกรรม มีความราบรื่น สะดวกสบาย รวดเร็ว					
39. ทันตแพทย์ประสานการทำงานกับแผนกอื่นๆ เช่น เช่น ห้องบัตร ห้องจ่ายยา ห้องเก็บเงิน หรือห้องตรวจโรค ด้วยการยึดประโยชน์ผู้ป่วยเป็นหลัก					
40. ทันตแพทย์นัดหมายเพื่อมารับการรักษาหรือติดตามการรักษาอย่างต่อเนื่อง ตามความจำเป็น					
41. ถ้ามีการเปลี่ยนทันตแพทย์อีกคนหนึ่งของที่นี่มาให้การรักษาต่อ ทันตแพทย์คนใหม่ สามารถให้รักษาต่อเนื่องไปได้อย่างราบรื่น เช่น ไม่ต้องตรวจเริ่มต้นใหม่เพราะมีข้อมูลสื่อสารระหว่างทันตแพทย์คนเก่าและคนใหม่แล้วถ้าไม่มี) (ประสบการณ์นี้ให้ คาดการณ์และให้คะแนน					

พฤติกรรมหรือผลของพฤติกรรมของทันตแพทย์ที่ปฏิบัติต่อท่าน	ความถี่พฤติกรรมของทันตแพทย์				
	5	4	3	2	1
42. เมื่อรักษาโรค หรืออาการที่มีหายแล้ว ทันตแพทย์แนะนำให้กลับมาตรวจเช็คสุขภาพช่องปาก อย่างสม่ำเสมอ					
43. ข้าพเจ้าได้รับบริการตรงเวลานัด					
ข้าพเจ้าได้รับการเลื่อนนัดบ่อย					
44. ข้าพเจ้าได้รับบริการครบทุกอย่างตามที่ทันตแพทย์ตรวจพบและได้ตกลงร่วมกันกับข้าพเจ้า					
45. ข้าพเจ้าพบว่า การขอพบหรือนัดหมายทันตแพทย์ ทำได้สะดวก					

*** deleted after EFA and CFA (จะถูกตัดออกหลังทำ EFA และ CFA)

Appendix C-2

Patient-centered care of dentist in primary care questionnaires (Preliminary)

แบบสอบถาม (ฉบับตั้งต้น)

เรื่อง การดูแลผู้ป่วยแบบยึดผู้ป่วยเป็นศูนย์กลางของทันตแพทย์ในหน่วยบริการปฐมภูมิ

(สำหรับทันตแพทย์)

คำชี้แจง

แบบสอบถามฉบับนี้ประกอบด้วย 2 ส่วนดังนี้

ส่วนที่ 1 ข้อมูลส่วนบุคคล

ส่วนที่ 2 การดูแลผู้ป่วยแบบยึดผู้ป่วยเป็นศูนย์กลางของทันตแพทย์

ส่วนที่ 1 ข้อมูลส่วนบุคคล

คำชี้แจง โปรดขีดเครื่องหมาย ✓ ลงในช่อง ☐ หน้าข้อความ หรือกรอกข้อมูลที่ตรงกับความเป็นจริงของท่าน

1. เพศ ☐ ชาย ☐ หญิง

2. ประสบการณ์ทำงาน .....ปี (เกิน 6 เดือนให้นับเป็น 1 ปี)

3. การศึกษาเฉพาะทาง (ระยะเวลาการศึกษา ตั้งแต่ 1 ปีขึ้นไป)

☐ มี ☐ ไม่มี

4. สังกัดโรงพยาบาลชุมชนระดับใด

☐ F3 ☐ F2 ☐ F1 ☐ M2

5. จำนวนผู้ป่วยที่ให้บริการเฉลี่ยต่อวันทั้งในเวลาและนอก) คน.....

(เวลาราชการในหน่วยบริการที่ท่านสังกัดนี้เท่านั้น

6. ในปัจจุบันท่านออกให้บริการที่ รพ หรือ หน่วยบริการปฐมภูมิ ด้วยหรือไม่ .สต.

☐ โดยเฉลี่ย -35 ครั้งต่อ สัปดาห์ ☐ โดยเฉลี่ย 1-2 ครั้งต่อสัปดาห์

☐ โดยเฉลี่ยเดือนละ 1 ครั้ง ☐ โดยเฉลี่ยน้อยกว่า 1 ครั้งต่อเดือน

☐ ไม่ออก

ส่วนที่ 2 การดูแลแบบยึดผู้ป่วยเป็นศูนย์กลางของทันตแพทย์

คำชี้แจง ให้ท่านระบุ **พฤติกรรมของท่านหรือสิ่งที่ท่านคำนึงถึงหรือรับรู้ได้ขณะให้บริการผู้ป่วย** ตามความเป็นจริง

ความถี่ของพฤติกรรมที่ท่านปฏิบัติ
5 หมายถึง ทำมากที่สุดหรือทุกครั้ง (81-100%)
4 หมายถึง ได้ทำบ่อยครั้ง (61-80%)
3 หมายถึง ได้ทำบ้าง (41-60%)
2 หมายถึง ไม่ค่อยได้ทำ (21-40%)
1 หมายถึง ทำน้อยที่สุดหรือไม่ได้ทำ (0-20%)

พฤติกรรมของท่านหรือสิ่งที่ท่านคำนึงถึงหรือรับรู้ได้ขณะให้บริการผู้ป่วย	ความถี่ของพฤติกรรมที่ท่านปฏิบัติ				
	5	4	3	2	1
1. ท่านสอบถามถึงการใช้ชีวิตทั่วๆไป เช่น บ้านอยู่ที่ไหน การทำงาน การศึกษา ครอบครัว เพื่อนๆ การใช้ชีวิตทั่ว ๆ ไป***					
2. ท่านนำบริบททั่ว ๆ ไป ตามข้อ มาคำนึงถึงการออกแบบการ 1 *****ดูแลสุขภาพช่องปากของคนไข้					
3. ท่านเปิดโอกาสให้ผู้ป่วยได้บอกความต้องการ หรือความคิดเห็น เกี่ยวกับสุขภาพปากและฟัน					
4. ท่านตอบสนองต่อความต้องการ และความคิดเห็นเกี่ยวกับสุขภาพปากและฟันของผู้ป่วย โดยยึดหลักการดูแลผู้ป่วยแบบองค์รวม					
5. ท่านสอบถามและค้นหาถึงปัญหา ข้อจำกัด อุปสรรค หรือความคิดความเชื่อที่อาจเกี่ยวข้องกับสุขภาพและกระบวนการในการรักษาของผู้ป่วย เช่น การมีเวลาจำกัด ค่าใช้จ่าย การเดินทาง ความคิดว่าฟันต้องหลุดไปเองเมื่อแก่ตัวลง โทษเวรกรรมที่เป็นโรคนี้ เป็นต้น					
6. ท่านนำข้อจำกัดต่างๆ และความคิดความเชื่อนั้นของผู้ป่วย เช่น โรคประจำตัว เวลาที่มีจำกัด ค่าใช้จ่าย การเดินทาง มาพิจารณาในการวางแผนการรักษา					
7. โดยทั่วไป ท่านได้พยายามสืบค้นถึง สาเหตุของการเจ็บป่วย ไม่เพียงแต่ ตรวจในช่องปากแต่สอบถามถึงสาเหตุอื่นๆ ร่วมด้วย เช่น ลักษณะการกิน การเคี้ยว ภาวะทางจิตใจ ความเครียด หรือความคิดความเชื่อที่อาจเกี่ยวข้องกับสุขภาพ					
8. ท่านได้สอบถามผู้ป่วยว่า ผู้ป่วยคิดว่าตนเองป่วยเป็นอะไร					
9. โดยทั่วไป ท่านได้สอบถามลึกลงไปถึงความกังวล ความไม่สบายใจ ต่อความเจ็บป่วยในช่องปากของผู้ป่วย					
10. ท่านสอบถามถึงผลกระทบของการเจ็บป่วยในช่องปากต่อการดำเนินชีวิตประจำวัน หรือ การทำงาน หรือการเรียนของผู้ป่วย					
11. ท่านสอบถามถึงความคาดหวังของผู้ป่วยต่อการมารับการรักษาครั้งนี้					

พฤติกรรมของท่านหรือสิ่งที่ท่านคำนึงถึงหรือรับรู้ได้ขณะให้บริการผู้ป่วย	ความถี่ของพฤติกรรมที่ท่านปฏิบัติ				
	5	4	3	2	1
12. ท่านได้อธิบายและแสดงให้เห็นว่าผลการรักษาที่จะเกิดขึ้นนั้นเป็นผลของการร่วมมือกันในการดูแลตัวเองของผู้ป่วย และการรักษาของท่าน ***					
13. ท่านได้ให้ผู้ป่วย (และญาติ ในบางกรณี) มีส่วนร่วมในการตัดสินใจ ในการเลือกการรักษาที่เหมาะสมกับผู้ป่วย					
14. ท่านเปิดโอกาสให้ผู้ป่วย (และญาติ ในบางกรณี) ได้ร่วมกำหนดเป้าหมายการรักษาร่วมกันกับท่าน					
15. ท่านได้อธิบายแผนและขั้นตอนการรักษา รวมถึงระยะเวลารักษาอย่างละเอียด					
16. ท่านได้อธิบายถึง ข้อดี ข้อเสีย ค่าใช้จ่าย ทางเลือกในการรักษา ผลที่อาจเป็นไปได้ของการรักษา					
17. วิธีการรักษาที่ท่านเลือกให้กับผู้ป่วยนั้น เป็นวิธีที่ดีที่สุด ง่ายหรือเหมาะสมที่สุดสำหรับตัวท่านเอง มากกว่าสำหรับผู้ป่วย***					
18. ท่านให้การดูแลผู้ป่วยด้วยความเคารพในศักดิ์ศรี และให้เกียรติผู้ป่วยและญาติ					
19. การมองผู้ป่วยด้วยความเป็นมนุษย์หรือความเป็นคนที่เท่าเทียมกัน ถือเป็นหลักที่ท่านคำนึงถึงสูงสุดเมื่อให้บริการผู้ป่วย					
20. ท่านเคยแสดงท่าทีไม่สบายใจ เมื่อต้องให้การรักษาแก่ ผู้ป่วยที่มีความแตกต่างกัน เช่น ฐานะ สภาพพิการ การแต่งกาย ความสะอาดสะอ้านของ ผู้ป่วย ***					
21. ท่านแสดงให้ผู้ป่วยไว้วางใจในตัวท่าน					
22. ท่านหลีกเลี่ยงที่จะให้บริการผู้ป่วยที่ท่านทราบว่าเป็นผู้ป่วยที่รับมือยาก เช่น คุณป้าที่อธิบายยากกว่าจะเข้าใจ ผู้ป่วยที่มีเรื่องถามแล้วถามอีกซ้ำๆ แม้ตอบไปแล้ว ผู้ป่วยที่มีประวัติเปลี่ยนหมอไปเรื่อย ๆ ผู้ป่วยที่มีอารมณ์แปรปรวน เป็นต้น***					
23. ท่านเอาใจใส่ในการดูแลสุขภาพปากและฟันของผู้ป่วยอย่างต่อเนื่อง และสอบถามความรู้สึกของผู้ป่วยต่อผลการรักษาในครั้งที่ผ่านมาก่อนจะเริ่มการรักษาใหม่ทุกครั้ง***					

พฤติกรรมของท่านหรือสิ่งที่ท่านคำนึงถึงหรือรับรู้ได้ขณะให้บริการผู้ป่วย	ความถี่ของพฤติกรรมที่ท่านปฏิบัติ				
	5	4	3	2	1
24. ท่านได้เน้นความสำคัญ เฝ้าติดตามและหมั่นสอบถาม สิ่งที่ท่านสอนหรือแนะนำ จนมั่นใจว่าผู้ป่วยจะสามารถดูแลสุขภาพช่องปากของตนเองได้เองอย่างเหมาะสม ***					
25. ท่านให้บริการด้วยท่าทีที่เหมาะสม ไม่ใช้อารมณ์ขณะให้บริการ					
26. บางครั้งท่านแสดงอารมณ์ไม่พอใจใส่ผู้ช่วย หรือ เจ้าหน้าที่					
27. เมื่อท่านเริ่มหงุดหงิด หรือโมโห ผู้ช่วย เจ้าหน้าที่ หรือผู้ป่วย ท่านสามารถจัดการกับอารมณ์ของตนเอง ทำให้ไม่ส่งผลเสียต่อการบริการของท่าน***					
28. ท่านแสดงท่าทีที่เห็นอกเห็นใจผู้ป่วย					
29. เมื่อผู้ป่วยเล่าประวัติความเจ็บป่วย ความกังวล ความคิดเห็นต่อการเจ็บป่วยของเขาให้ท่านทราบ ท่านเข้าใจและมองเห็นความเจ็บป่วย หรือความกังวลได้ในมุมมองเดียวกับผู้ป่วย					
30. แม้ท่านจะรับรู้ต่อความรู้สึก หรือความกังวล หรือไม่สบายใจที่เกี่ยวข้องกับสุขภาพช่องปากของผู้ป่วย แต่ท่านก็ไม่ปรับแนวทางการดูแลผู้ป่วย***					
31. ท่านมีความอดทนและใจเย็น แม้มีความยุ่งยากในการให้การดูแลรักษาผู้ป่วย					
32. เมื่อพบว่าผู้ป่วยมีความกังวลต่อการทำฟัน ท่านพูดคุยกับผู้ป่วยเพื่อให้คลายกังวล และ สบายใจขึ้นก่อนที่จะทำฟัน***					
33. แม้ผู้ป่วยจะร้องว่าเจ็บหรือเสียวมาก ท่านก็ไม่หยุด หรือพักการทำหัตถการ เพราะอยากให้งานเสร็จ***					
34. ท่านได้สอบถามความรู้สึกเจ็บปวด ขณะให้บริการทำฟันอยู่เป็นระยะๆ					
35. ท่านเตือนทุกครั้ง ก่อนที่ท่านจะลงมือทำฟันที่อาจทำให้ผู้ป่วยเจ็บหรือเสียวมาก เช่น เริ่มฉีดยาชา เริ่มกรอฟัน เมื่อจะงัดฟันแรงๆ หรือขยับเก้าอี้ทำฟันขึ้นลงเร็วๆ เป็นต้น					

พฤติกรรมของท่านหรือสิ่งที่ท่านคำนึงถึงหรือรับรู้ได้ขณะให้บริการผู้ป่วย	ความถี่ของพฤติกรรมที่ท่านปฏิบัติ				
	5	4	3	2	1
36. ท่าน มักกล่าวทักทาย หรือเอ่ยชื่อทักทายผู้ป่วย อย่างเป็นมิตร ***					
37. ท่านให้เวลาผู้ป่วยอย่างเพียงพอในการเล่าอาการ และประวัติความเจ็บป่วย					
38. ท่านตั้งใจฟัง สบตา มองผู้ป่วย มากกว่ามองเอกสารหรือจอคอมพิวเตอร์ และแสดงท่าทีสนใจในคำบอกเล่าของผู้ป่วย					
39. ท่านอธิบาย หรือพูดคุย ด้วยภาษาที่เข้าใจได้ง่าย ไม่ใช้ศัพท์ทางการแพทย์มากเกินไป					
40. ท่านมักพูดเร่งรัดหรือตัดบท ขณะที่ผู้ป่วยกำลังเล่าและอธิบายรายละเอียดถึงอาการ ความเจ็บป่วย***					
41. ท่านใช้อุปกรณ์หรือสื่อต่างๆ เช่นแผ่นพับ รูปภาพ โมเดล วิดีโอ คลิป หรือให้ดูฟิล์มเอ็กซเรย์ ประกอบการวินิจฉัย การรักษา หรือการให้คำแนะนำต่างๆ ทั้งก่อนและหลังการรักษา***					
42. เมื่ออธิบายการวินิจฉัย แผนการรักษา คำแนะนำต่างๆ แล้ว ท่านสอบถามผู้ป่วยอีกครั้งว่ามีข้อสงสัย มีคำถาม หรือไม่เข้าใจจุดไหน					
43. โดยทั่วไปแล้ว ท่านสังเกตุ ท่าที การแสดงออก และอวจนภาษา ของผู้ป่วย ขณะ ซักประวัติ พูดคุยให้คำปรึกษา ทั้งขณะทำฟัน ก่อนและ หลังบริการ					
44. เมื่อสังเกตเห็นท่าที และ อวจนภาษาของผู้ป่วย ที่แสดงออกถึงความอึดอัดหรือกังวล หรือสงสัย หรืออื่นๆ ท่านตอบสนองอย่างเหมาะสม เช่น ท่านพูดให้คลายกังวล หรือทวนสอบความเข้าใจสิ่งที่อธิบาย					
45. ท่านตรวจสุขภาพช่องปากส่วนอื่นๆ ทั้งปาก นอกเหนือจากปัญหาหลักที่ผู้ป่วยมาพบท่าน***					
46. ท่านได้แนะนำวิธีการดูแลสุขภาพปากและฟัน เช่น วิธีแปรงฟัน วิธีใช้ไหมขัดฟัน ยาสีฟันที่เหมาะสม อาหารที่ควร					

พฤติกรรมของท่านหรือสิ่งที่ท่านคำนึงถึงหรือรับรู้ได้ขณะให้บริการผู้ป่วย	ความถี่ของพฤติกรรมที่ท่านปฏิบัติ				
	5	4	3	2	1
หลีกเลี่ยง เป็นต้น					
47. เมื่อผู้ป่วยมีโรคทางระบบที่เกี่ยวข้องกับสุขภาพช่องปาก ท่านอธิบายให้ผู้ป่วยเข้าใจว่าโรคเหล่านั้นเชื่อมโยงกับสุขภาพปากและฟัน ***					
48. การประสานงานระหว่างท่านกับทันตแพทย์ท่านอื่นๆ หรือกับเจ้าหน้าที่ในแผนกทันตกรรม มีความราบรื่น สะดวกสบาย รวดเร็ว ***					
49. ท่านรู้สึกอึดอัด หรือเกรงใจ ที่จะต้องส่งต่อผู้ป่วยไปให้ทันตแพทย์ท่านอื่นในแผนก/ฝ่าย***					
50. เมื่อมีกรณีจำเป็น ที่ต้องประสานงานกับแผนกอื่นๆ ท่านมีความพยายามในการประสานเพื่อให้ผู้ป่วยได้รับการดูแลที่ดีที่สุด ด้วยยึดหลักผู้ป่วยเป็นศูนย์กลาง แม้บางครั้งไม่ได้ทำตามแนวทางที่กำหนดไว้บ้าง					
51. ท่านทำงานประสานกับคนอื่นๆ ด้วยคำนึงถึงการมุ่งเน้นผู้ป่วยเป็นศูนย์กลาง					
52. ท่านนัดหมายผู้ป่วยเพื่อมารับการรักษาอย่างต่อเนื่อง หรือติดตามการรักษาตามความจำเป็นของโรคหรือหัตถการ					
53. เมื่อต้องส่งต่อผู้ป่วยไปรับการรักษาต่อกับทันตแพทย์ท่านอื่นทั้งในและนอกหน่วยงาน ท่านจะบันทึกข้อมูลอย่างละเอียด เตรียมเอกสารที่จำเป็น เช่น การระบุตำแหน่งที่ชัดเจน การวาดรูปประกอบ ฟิลม์หรือไฟล์ x-ray, โมเดลฟัน เป็นต้น					
54. เมื่อรักษาตามขั้นตอนของงานทันตกรรมต่างๆ เรียบร้อยแล้ว ท่านแนะนำให้ผู้ป่วย กลับมาตรวจเช็คสุขภาพช่องปากเป็นระยะๆ ***					
55. ผู้ป่วยที่อยู่ในพื้นที่รับผิดชอบ อำเภอ หรือตำบล หรือ) Catchment area ของท่าน (เมื่อมีการส่งต่อผู้ป่วยอย่างเป็น					

พฤติกรรมของท่านหรือสิ่งที่ท่านคำนึงถึงหรือรับรู้ได้ขณะให้บริการผู้ป่วย	ความถี่ของพฤติกรรมที่ท่านปฏิบัติ				
	5	4	3	2	1
ทางการ มีเอกสารหรือคีย์ในระบบส่งต่อ ไม่ใช่แค่แนะนำให้) (หาผู้เชี่ยวชาญไปรับการรักษาที่หน่วยบริการอื่น โดยทั่วไปแล้ว ท่านอาจจะไม่ได้ ติดตามว่าผู้ป่วยได้รับบริการตามที่ท่านส่งต่อไป หรือไม่***					
56. เมื่อมีการส่งต่อผู้ป่วยทั้งแบบทางการ และไม่ทางการ เช่น) (จดหมายแนบด้วยลายมือไปรับการรักษาที่หน่วยบริการอื่น และถ้ามีแผนการรักษาว่าต้องมีการกลับมารักษากับท่านอีก ท่านจะเตรียมการวางแผน และ ติดตามให้ได้รับการรักษา และรับกลับมารักษากับท่านอย่างเรียบร้อย***					
57. ผู้ป่วยของท่านรอหน้าห้องทันตกรรมเป็นเวลานาน หรือได้รับบริการไม่ตรงตามเวลานัด***					
58. ท่านเลื่อนนัดผู้ป่วยบ่อย ***					
59. ท่านให้บริการผู้ป่วยได้ครบชนิดงาน ตามความจำเป็นของผลการตรวจและได้ตกลงและแจ้งผู้ป่วยไว้ ในครั้งนั้นๆ					
60. เมื่อผู้ป่วยมีความจำเป็นต้องการพบท่าน ท่านให้ผู้ป่วยเข้าถึงหรือขอพบท่านได้สะดวก					
61. ท่านพิจารณาดูแลให้ผู้ป่วยกลุ่มเปราะบาง เช่น ผู้พิการ ผู้สูงอายุ เด็กขาดผู้ดูแล คนไร้สิทธิ เป็นต้น ได้เข้ารับบริการอย่างสะดวก และเหมาะสม					

*** deleted after EFA and CFA (จะถูกตัดออกหลังทำ EFA และ CFA)

Appendix D

Distribution of participants

Distribution of patient participants. (n=1,527)

Geographic region/ province		Small hospital	Large hospital	Total
North	Nan	0	15	15
	Chiang Rai	69	0	69
	Kamphaeng Phet	79	0	79
	Nakhon Sawan	41	57	98
	Phetchabun	0	46	46
	Tak	0	58	58
	Uttaradit	65	0	65
	sub-Total	254	176	430
Central	Chon Buri	0	52	52
	Kanchanaburi	70	0	70
	Phra Nakhon Si Ayutthaya	0	69	69
	Samut Prakan	36	0	36
	Samut Songkhram	0	61	61
	Saraburi	73	0	73
	Sing Buri	51	0	51
	sub-Total	230	182	412
North- east	Bueng Kan	57	0	57
	Buri Ram	43	15	58
	Chaiyaphum	47	0	47
	Kalasin	68	0	68
	Roi Et	0	90	90
	Surin	0	54	54
	Udon Thani	0	65	65
	sub-Total	215	224	439
South	Krabi	40	0	40
	Pattani	52	0	52
	Phatthalung	0	48	48
	Songkhla	16	0	16

Geographic region/ province	Small hospital	Large hospital	Total
Trang	0	90	90
sub-Total	108	138	246
Total	807	720	1527

Distribution of all dentist participants. (n=1,059)

Geographic region	Province	Small hospital	Large hospital	Total
North	Chiang Rai	24	8	32
	Chiang Mai	7	5	12
	Nan	2	15	17
	Phayao	13	0	13
	Phrae	14	0	14
	Mae Hong Son	9	2	11
	Lampang	5	4	9
	Lamphun	7	0	7
	Tak	6	11	17
	Phitsanulok	8	5	13
	Phetchabun	1	8	9
	Sukhothai	8	7	15
	Uttaradit	10	5	15
	Kamphaeng Phet	14	1	15
	Chai Nat	7	2	9
	Nakhon Sawan	8	11	19
	Phichit	2	3	5
	Uthai Thani	8	3	11
Central	Nakhon Nayok	8	2	10
	Nonthaburi	16	14	30
	Pathum Thani	4	1	5
	Phra Nakhon Si Ayutthaya	13	20	33
	Lop Buri	5	5	10
	Saraburi	4	4	8
	Sing Buri	9	0	9
	Ang Thong	3	0	3
	Kanchanaburi	7	5	12

Geographic region	Province	Small hospital	Large hospital	Total
	Nakhon Pathom	15	15	30
	Prachuap Khiri Khan	0	0	0
	Phetchaburi	1	0	1
	Ratchaburi	11	7	18
	Samut Songkhram	0	8	8
	Suphan Buri	21	12	33
	Chanthaburi	5	0	5
	Chachoengsao	9	6	15
	Chon Buri	12	11	23
	Trat	7	6	13
	Prachin Buri	13	0	13
	Rayong	13	2	15
	Samut Prakan	6	11	17
	Sa kaeo	13	0	13
North-east	Kalasin	10	0	10
	Khon Kaen	10	7	17
	Maha Sarakham	7	2	9
	Roi Et	17	17	34
	Nakhon Phanom	0	5	5
	Bueng Kan	11	0	11
	Loei	8	0	8
	Sakon Nakhon	3	1	4
	Nong Khai	2	0	2
	Nong Bua Lam Phu	7	6	13
	Udon Thani	11	10	21
	Chaiyaphum	16	0	16
	Nakhon Ratchasima	11	12	23
	Buri Ram	29	12	41
	Surin	17	1	18
	Mukdahan	7	0	7
	Yasothon	2	3	5
	Si Sa Ket	14	2	16
	Amnat Charoen	4	0	4
	Ubon Ratchathani	11	8	19
South	Krabi	12	5	17

Geographic region	Province	Small hospital	Large hospital	Total
	Chumphon	12	5	17
	Nakhon Si Thammarat	16	5	21
	Phangnga	8	5	13
	Phuket	5	3	8
	Ranong	3	0	3
	Surat Thani	7	6	13
	Trang	12	13	25
	Narathiwat	6	0	6
	Pattani	5	0	5
	Phatthalung	16	1	17
	Yala	6	7	8
	Songkhla	25	18	48
	Satun	8	0	8
	Total	686	373	1059

Appendix E

EFA output

EFA output shows factor loadings of 45-item preliminary PCCDS-P version.

(Generated in Jamovi software)

Factor Loadings

	Factor							
	1	2	3	4	5	6	7	Uniqueness
ac2.44	0.7758	0.1659	0.2073	0.2683	0.1445	0.1268	0.0888	0.211
cd1.38	0.7622	0.1183	0.2278	0.2111	0.2182	0.1820	0.1200	0.213
cn3.42	0.7361	0.0928	0.2184	0.1798	0.2500	0.1589	0.1399	0.262
ac1.43	0.7143	0.1252	0.2027	0.1967	0.1420	0.1404	0.0962	0.345
cn1.40	0.6976	0.0875	0.2254	0.3170	0.2363	0.1586	0.1461	0.252
cd2.39	0.6955	0.0583	0.2199	0.2752	0.1457	0.1425	0.1399	0.328
ac3.45	0.6822	0.1305	0.2635	0.1901	0.1156	0.1550	0.0966	0.365
cp1.35	0.6148	0.1073	0.3237	0.2268	0.2235	0.2077	0.1314	0.344
cp3.37	0.6093	0.1568	0.2875	0.1341	0.2933	0.2193	0.2343	0.314
cp2.36	0.5782	0.1945	0.3306	0.1628	0.3413	0.1940	0.2103	0.294
cn2.41	0.5754	0.1190	0.3102	0.1772	0.2208	0.1391	0.1260	0.443
wp4.4	0.1171	0.8943	0.1045	0.0889	0.1225	0.1795	0.1232	0.105
wp3.3	0.1669	0.8823	0.1070	0.1064	0.0676	0.1545	0.1242	0.127
wp5.5	0.0916	0.8743	0.1189	0.1118	0.0753	0.1883	0.1504	0.137
wp1.1	0.0862	0.8072	0.1071	0.0296	0.0824	0.1017	0.1697	0.283
wp2.2	0.1020	0.7623	0.0607	0.0792	0.1152	0.2056	0.2035	0.302
co5.33	0.2602	0.2120	0.7658	0.1155	0.1202	0.0862	0.1176	0.252
co4.32	0.3364	0.0366	0.7500	0.2489	0.1793	0.0861	0.0522	0.219
co1.29	0.3133	0.0358	0.7218	0.3306	0.1842	0.0851	0.0352	0.228
co6.34	0.3764	0.0883	0.6955	0.1478	0.1959	0.0924	0.1511	0.275
co2.30	0.3506	0.2376	0.6355	0.1242	0.1596	0.1525	0.1737	0.322
co3.31	0.3873	0.1945	0.4689	0.2000	0.2076	0.2018	0.1759	0.438
dp3.18	0.3666	0.0888	0.2391	0.7126	0.2045	0.1913	0.1234	0.199
dp4.19	0.4507	0.1120	0.2210	0.6964	0.1794	0.1717	0.1428	0.168
dp2.17	0.3513	0.2073	0.2546	0.6401	0.2269	0.1715	0.1222	0.263
sa2.22	0.3077	0.0704	0.4140	0.6315	0.1573	0.1588	0.0581	0.277
sa1.21	0.5119	0.1318	0.1224	0.6091	0.1868	0.1767	0.0945	0.260

Factor Loadings

	Factor							
	1	**2**	**3**	**4**	**5**	**6**	**7**	**Uniqueness**
dp5.20	0.4769	0.1590	0.2148	0.6076	0.2137	0.2289	0.1346	0.216
em3.25	0.3443	0.1315	0.2240	0.1508	0.7589	0.2410	0.1957	0.119
em2.24	0.3485	0.1996	0.2018	0.2161	0.7410	0.2242	0.1687	0.124
em1.23	0.3259	0.1812	0.2536	0.2464	0.7002	0.2423	0.1913	0.150
an3.28	0.3478	0.1427	0.2639	0.2035	0.6803	0.2494	0.1498	0.200
an2.27	0.3952	0.0849	0.2133	0.3281	0.5896	0.1954	0.1941	0.260
sd5.15	0.2613	0.3089	0.1581	0.1764	0.2410	0.7569	0.2071	0.106
sd3.13	0.2505	0.3034	0.1095	0.1494	0.2415	0.7328	0.2501	0.153
sd2.12	0.2518	0.2719	0.1406	0.2208	0.2536	0.6928	0.2779	0.173
sd4.14	0.3155	0.2931	0.1223	0.2033	0.2093	0.6867	0.2289	0.190
sd1.11	0.2412	0.3546	0.1655	0.2790	0.1889	0.5729	0.2191	0.299
di2.7	0.2329	0.3855	0.1388	0.1279	0.1522	0.2210	0.7238	0.166
di5.10	0.2034	0.3597	0.1221	0.1234	0.2270	0.2680	0.7166	0.162
di3.8	0.2070	0.3168	0.2086	0.1267	0.2059	0.3418	0.6795	0.176
di4.9	0.2636	0.3004	0.1599	0.1487	0.2285	0.2998	0.6036	0.286

Note. 'Principal axis factoring' extraction method was used in combination with a 'varimax' rotation

*Dropped items

EFA output shows factor loadings of 61-item preliminary PCCDS-D version.

(Generated in Jamovi software)

	Factor								
	1	**2**	**3**	**4**	**5**	**6**	**7**	**8**	**9**
wp2.2	0.754	0.078	0.030	-0.012	0.077	0.019	0.073	0.148	0.026
di3.9	0.744	-0.026	0.148	0.157	-0.069	0.153	0.059	0.143	-0.029
wp1.1	0.739	0.095	0.042	0.034	0.167	-0.103	0.048	-0.050	-0.020
di4.10	0.731	-0.008	0.084	0.213	-0.041	0.116	0.076	0.079	0.034
di1.7	0.706	0.039	0.062	0.215	-0.006	0.103	0.033	0.224	0.087
dp7.24	0.648	0.144	0.071	0.286	-0.016	0.229	0.014	-0.058	0.132
di5.11	0.620	0.064	0.055	0.100	0.085	0.256	0.008	0.136	-0.004
dp6.23	0.533	0.171	0.106	0.231	0.026	0.092	-0.079	-0.061	0.309
em5.32	0.528	0.082	0.037	0.288	0.089	0.065	-1.32e−4	-0.029	-0.169
sd1.12	0.476	0.004	-0.060	0.196	0.074	0.364	0.098	-0.005	0.055
di2.8	0.469	0.029	0.124	0.055	0.017	0.034	0.135	0.120	-0.055
cp1.45	0.456	0.193	-0.112	0.165	0.079	0.110	-0.118	0.006	-0.049
cp3.47	0.417	0.134	-0.013	0.381	0.141	0.360	-0.036	-0.121	0.114
wp3.3	0.400	0.027	0.139	0.235	0.053	0.174	-0.104	0.367	0.328
cn3.54	0.391	0.252	0.129	0.112	0.075	0.217	-0.060	-0.021	-0.174
cn5.56	0.256	0.120	0.069	0.101	0.110	-0.041	0.038	-0.155	-0.080
cd3.50	0.163	0.784	0.024	0.012	0.014	0.099	-0.209	-0.068	0.086
cn1.52	0.045	0.748	0.084	0.121	0.206	0.058	0.003	0.202	-0.097
cd4.51	0.135	0.745	0.240	0.141	0.091	0.040	-0.023	0.253	0.050
cp2.46	0.154	0.725	-0.012	0.098	0.018	0.106	-0.125	-0.101	-0.069
cn2.53	0.112	0.718	0.211	0.116	0.069	0.107	0.102	0.107	0.029
ac4.60	-0.045	0.709	0.093	0.117	0.116	0.008	0.130	0.035	0.196
ac3.59	0.119	0.562	0.043	0.147	0.114	0.273	-0.079	-0.112	0.419
ac5.61	0.242	0.517	0.080	0.145	0.166	0.193	-0.300	-0.019	-0.088
co1.36	0.307	0.326	0.122	0.307	0.159	0.233	-0.210	-0.058	-0.263
cd1.48	0.046	0.325	0.156	0.127	0.100	0.159	-0.147	0.005	0.250
dp2.19	0.204	0.131	0.824	0.075	0.073	0.081	-0.113	0.064	-2.08e−5
dp1.18	0.247	0.141	0.779	0.095	0.120	0.117	-0.124	0.071	-0.004
dp4.21	0.159	0.083	0.735	0.092	0.056	0.018	-0.049	-0.004	0.017
sa1.25	0.133	0.117	0.709	0.091	0.157	0.074	-0.147	-0.080	0.048
an1.33	0.265	0.081	0.574	0.193	0.292	0.223	-0.033	0.016	0.008
sa2.26	0.082	-0.047	-0.463	-0.083	-0.025	0.079	0.401	0.084	-0.040
co5.40	0.089	-0.007	-0.450	-0.191	-0.183	-0.052	0.348	-0.098	-0.165

	Factor								
	1	**2**	**3**	**4**	**5**	**6**	**7**	**8**	**9**
sa3.27	-0.139	0.074	0.291	0.130	0.168	0.057	-0.085	0.036	0.094
ac2.58	0.217	-0.089	-0.284	-0.018	-0.198	0.021	0.263	-0.057	-0.094
co8.43	0.280	0.111	0.224	0.710	0.143	0.132	0.030	0.109	0.068
co9.44	0.381	0.172	0.190	0.648	0.088	0.080	-0.109	0.101	0.191
co2.37	0.293	0.169	0.117	0.640	0.125	0.152	-0.126	-0.092	-0.025
co3.38	0.224	0.125	0.288	0.619	0.143	-0.079	-0.036	0.047	0.106
co4.39	0.201	0.241	0.133	0.534	0.063	0.160	-0.038	0.087	0.155
co7.42	0.396	0.125	0.112	0.497	0.070	0.195	-0.093	0.244	-0.141
co6.41	0.278	0.074	-0.013	0.363	0.136	0.199	-0.078	-1.61e−4	-0.057
an2.34	0.117	0.104	0.098	0.117	0.851	-0.104	-0.074	0.133	0.149
em1.28	0.103	0.055	0.276	0.105	0.763	-0.015	-0.061	-0.004	0.135
an3.35	0.205	0.193	0.076	0.152	0.627	0.303	-0.135	-0.088	-0.104
em2.29	0.194	0.120	0.267	0.102	0.620	0.304	-0.074	-0.190	-0.121
em4.31	0.035	0.121	0.216	0.145	0.585	-0.049	-0.077	0.172	0.041
ac1.57	-0.033	0.269	0.021	-0.003	0.337	0.138	0.024	0.035	-0.060
sd5.16	0.160	0.255	0.118	0.120	0.094	0.713	-0.055	0.129	0.016
sd4.15	0.205	0.279	0.180	0.032	0.030	0.636	-0.130	0.076	0.043
sd3.14	0.356	0.070	0.044	0.295	0.001	0.584	0.072	0.170	0.120
sd2.13	0.333	0.183	0.121	0.251	0.064	0.534	0.000	0.205	0.229
dp5.22	0.048	0.051	-0.139	0.044	-0.081	0.002	0.616	-0.070	0.043
sd6.17	0.206	-0.156	-0.321	-0.026	-0.076	-0.035	0.517	-0.098	-0.086
em3.30	-0.035	-0.032	0.015	-0.269	-0.060	-0.064	0.513	-0.072	-0.171
dp3.20	0.096	-0.079	-0.238	-0.052	-0.063	-3.40e−4	0.363	-0.014	0.035
cn4.55	-0.218	-0.079	-0.077	0.079	0.160	-0.085	0.291	0.055	-0.118
wp5.5	0.484	0.130	0.008	0.047	0.083	0.221	-0.134	0.556	-0.060
wp6.6	0.425	0.134	-0.063	0.156	0.167	0.115	-0.149	0.528	0.015
wp4.4	0.409	0.179	0.122	0.083	0.043	0.189	-0.088	0.479	0.088
cd2.49	0.093	-0.120	-0.166	-0.140	-0.076	-0.106	0.209	-0.068	-0.440

Note. 'Principal axis factoring' extraction method was used in combination with a 'varimax' rotation

Appendix F

Assumption tests for CFA and measurement invariance test

Descriptive of 1,167 patients' survey data for CFA (42- item)

	Range	Mean	Standard deviation	Skewness	Kurtosis
wp1.1	1-5	3.62	1.15	-0.629	-0.239
wp2.2	1167	3.81	1.08	-0.797	0.173
wp3.3	1167	3.93	1.06	-0.922	0.44
wp4.4	1167	3.78	1.1	-0.754	0.035
wp5.5	1167	3.83	1.12	-0.841	0.114
di2.7	1167	3.97	0.994	-0.775	0.126
di3.8	1167	4	0.981	-0.802	0.173
di4.9	1167	3.92	1	-0.734	0.0513
di5.10	1167	3.91	0.999	-0.747	0.158
sd1.11	1167	4.1	0.925	-0.849	0.31
sd2.12	1167	3.99	0.959	-0.725	0.0541
sd3.13	1167	3.94	0.98	-0.775	0.267
sd4.14	1167	4.14	0.927	-0.864	0.207
sd5.15	1167	4.17	0.894	-0.799	-0.066
dp2.17	1167	4.2	0.879	-0.949	0.47
dp3.18	1167	4.29	0.874	-1.11	0.685
dp4.19	1167	4.27	0.812	-0.809	-0.0614
dp5.20	1167	4.29	0.839	-1.03	0.594
sa1.21	1167	4.34	0.82	-1.08	0.602
sa2.22	1167	4.23	0.908	-1.28	1.7
em1.23	1167	4.11	0.876	-0.814	0.503
em2.24	1167	4.19	0.861	-0.941	0.766
em3.25	1167	4.1	0.915	-0.875	0.57
an2.27	1167	4.22	0.91	-1.05	0.686

	Range	Mean	Standard deviation	Skewness	Kurtosis
an3.28	1167	4.15	0.942	-1.04	0.827
co1.29	1167	4.25	0.912	-1.24	1.41
co2.30	1167	4.09	0.931	-0.927	0.661
co3.31	1167	4.05	0.951	-0.869	0.451
co4.32	1167	4.16	0.903	-0.939	0.585
co5.33	1167	3.87	1.03	-0.707	0.096
co6.34	1167	4.03	0.956	-0.893	0.564
cp1.35	1167	4.18	0.844	-0.755	0.0205
cp2.36	1167	4.12	0.89	-0.716	-0.0897
cp3.37	1167	4.16	0.888	-0.903	0.492
cd1.38	1167	4.17	0.836	-0.753	0.0694
cd2.39	1167	4.16	0.86	-0.843	0.474
cn1.40	1167	4.16	0.868	-0.873	0.506
cn2.41	1167	4.04	0.943	-0.828	0.391
cn3.42	1167	4.17	0.88	-0.786	-0.0384
ac1.43	1167	4.16	0.939	-1.06	0.777
ac2.44	1167	4.23	0.873	-0.972	0.456
ac3.45	1167	4.22	0.906	-1.06	0.726

Descriptive of 754 dentists' survey with data for CFA (36-item)

	Range	Mean	Standard deviation	Skewness	Kurtosis
wp1.1	1-5	3.1	1.05	0.0288	-0.365
wp2.2	1-5	3.3	1.09	-0.289	-0.466
wp3.3	1-5	4.17	0.885	-0.971	0.598
wp4.4	1-5	4.1	0.777	-0.432	-0.351
wp5.5	1-5	4.11	0.875	-0.902	0.544
wp6.6	1-5	4.37	0.785	-1.37	1.27
di1.7	1-5	3.52	1.03	-0.3	-0.481
di2.8	1-5	3.18	1.16	-0.236	-0.79
di3.9	1-5	3.15	1.07	-0.0876	-0.458
di4.10	1-5	3.21	1.07	-0.103	-0.598
di5.11	1-5	3.29	1.12	-0.235	-0.593
sd1.12	1-5	3.68	1.17	-0.714	-0.162
sd2.13	1-5	4.49	0.696	-1.28	1.46
sd3.14	1-5	4.08	0.892	-0.771	0.173
sd4.15	2-5	4.24	0.809	-0.823	0.00302
sd5.16	2-5	4.43	0.715	-1.03	0.419
sd5.17	1-5	3.84	1.07	-0.849	0.21
dp1.18	2-5	4.4	0.709	-1.01	0.662
dp2.19	2-5	4.35	0.745	-0.987	0.513
dp2.20	1-5	4.16	1.25	-1.4	0.723
dp4.21	2-5	4.18	0.73	-0.629	0.153
dp4.22	1-5	3.66	1.14	-0.443	-0.819
dp6.23	1-5	3.77	1.01	-0.554	-0.203
dp7.24	1-5	3.3	0.997	-0.241	-0.283
sa1.25	1-5	4.24	0.757	-0.955	1
sa1.26	1-5	4.18	0.999	-1.12	0.545
sa3.27	1-5	4.18	1.01	-1.48	1.901
em1.28	1-5	4.6	0.604	-1.46	1.32
em2.29	2-5	4.48	0.672	-1.13	0.778
em2.30	1-5	3.84	0.985	-0.646	-0.0353
em4.31	2-5	4.54	0.655	-1.18	0.433

	Range	Mean	Standard deviation	Skewness	Kurtosis
em5.32	1-5	3.24	1.07	-0.231	-0.548
an1.33	2-5	4.4	0.717	-1.06	0.822
an2.34	3-5	4.68	0.538	-1.45	1.16
an3.35	2-5	4.55	0.644	-1.27	1.09
co1.36	1-5	4.05	0.937	-0.783	0.13
co2.37	1-5	4.07	0.782	-0.622	0.284
co3.38	1-5	4.03	0.809	-0.586	-0.00224
co4.39	2-5	4.34	0.696	-0.756	0.107
co4.40	1-5	3.89	0.949	-0.803	0.311
co6.41	1-5	3.59	1.05	-0.601	-0.141
co7.42	1-5	3.94	0.929	-0.613	-0.272
co8.43	2-5	4.19	0.734	-0.589	-0.0416
co9.44	2-5	4.19	0.684	-0.429	-0.165
cp1.45	1-5	3.88	0.857	-0.365	-0.418
cp1.46	1-5	1.92	0.836	0.639	-0.0762
cp3.47	1-5	4.09	0.844	-0.759	0.386
cd1.48	1-5	4.34	0.755	-0.986	0.624
cd1.49	1-5	4.07	1.14	-1.09	0.234
cd3.50	1-5	4.19	0.818	-0.854	0.447
cd4.51	1-5	4.32	0.723	-0.842	0.449
cn1.52	1-5	4.31	0.739	-0.899	0.714
cn2.53	1-5	4.19	0.794	-0.69	-0.0753
cn3.54	1-5	4.03	0.999	-0.948	0.509
cn3.55	1-5	2.8	1.15	0.219	-0.67
cn5.56	1-5	3.56	0.873	-0.228	0.0337
ac1.57	2-5	4.04	0.774	-0.471	-0.211
ac1.58	1-5	4.2	0.925	-1.21	1.4
ac3.59	2-5	4.21	0.712	-0.677	0.418
ac4.60	1-5	4.18	0.787	-0.653	-0.097
ac5.61	1-5	4.3	0.741	-0.79	0.198

Assessment of normality of 1,167 patients' data for CFA

Variable	min	max	skew	c.r.	kurtosis	c.r.
DP	1.669	7.73	-0.941	-13.13	0.362	2.522
DI	1.477	7.385	-0.715	-9.978	0.096	0.67
IC	2.012	8.405	-0.803	-11.198	0.404	2.817
CO	1.384	6.92	-0.789	-11.005	0.548	3.819
SD	1.568	7.84	-0.627	-8.747	-0.255	-1.779
HO	1.205	6.025	-0.826	-11.52	0.46	3.206
EAM	1.543	7.715	-0.9	-12.548	0.746	5.203
Multivariate					67.571	102.821

Assessment of normality of 754 dentists' data for CFA

Variable	min	max	skew	c.r.	kurtosis	c.r.
DP	2	5	-1.059	-11.868	1.317	7.381
DI	1	5	-0.154	-1.731	-0.259	-1.451
IC	1.5	5	-0.679	-7.607	0.39	2.184
CO	2.333	5	-0.471	-5.279	-0.116	-0.648
SD	2	5	-0.89	-9.974	0.413	2.316
WP	2	5	-0.777	-8.708	0.27	1.513
EAM	2.8	5	-1.096	-12.291	0.476	2.669
Multivariate					14.587	17.842

Geographic distribution of patient samples for CFA and invariance test (N=1,167)

Geographic region	Province	Hopital	
		Small	Large
Central	Chon Buri	0	36
	Kanchanaburi	50	0
	Phra Nakhon Si Ayutthaya	0	64
	Samut Prakan	20	0
	Samut Songkhram	0	49
	Saraburi	53	0
	Sing Buri	41	0
	subTotal	164	149
North	Nan	0	12
	Chiang Rai	56	0
	Kamphaeng Phet	62	0
	Nakhon Sawan	21	37
	Phetchabun	0	34
	Tak	0	42
	Uttaradit	50	0
	subTotal	189	125
North easthern	Bueng Kan	37	0
	Buri Ram	43	13
	Chaiyaphum	40	0
	Kalasin	48	0
	Roi Et	0	76
	Surin	0	43
	Udon Thani	0	52
	subTotal	168	184
South	Krabi	29	0
	Pattani	42	0
	Phatthalung	0	41
	Songkhla	11	0

Geographic region	Province	Hopital	
		Small	Large
	Trang	0	65
	subTotal	82	106
	Total	615	552

Geographic distribution of dentist sample for CFA (N=754)

Geographic region	Health region	Hospital	
		Small	Large
North	1	37	19
	2	32	10
	3	13	13
	subTotal	82	42
Central	4	51	37
	5	54	57
	6	44	20
	subTotal	149	114
North_east	7	39	33
	8	18	16
	9	47	50
	10	10	7
	subTotal	114	106
South	11	15	5
	12	95	32
	subTotal	110	37
	Total	455	299

Figures of multilevel constrained parameters measurement models PCCDS-P version.

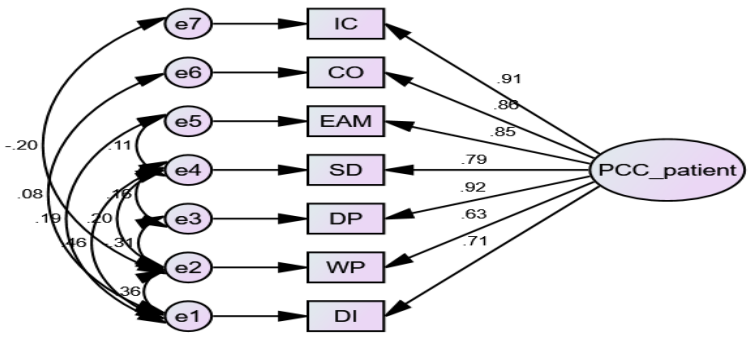

Chi-square = 4.973, Chi-square/df = .995, df = 5, p = .419,
GFI = .998, AGFI= .987, CFI = 1.000, NFI = .999, TLI = 1.000
RMR = .009, RMSEA = .000

Figure Measurement model of PCCDS-P version of small hospital only

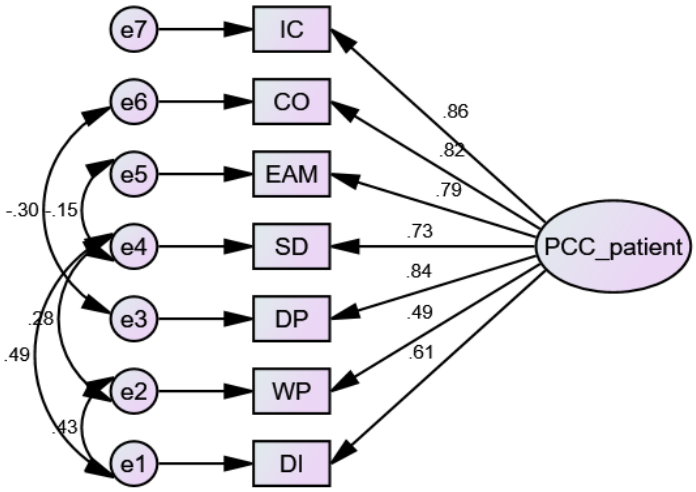

Chi-square = 8.996, Chi-square/df = 1.000, df = 9, p = .438,
GFI = .995, AGFI= .986, CFI = 1.000, NFI = .996, TLI = 1.000
RMR = .012, RMSEA = .000

Figure of Measurement model of PCCDS-P version of large hospital only

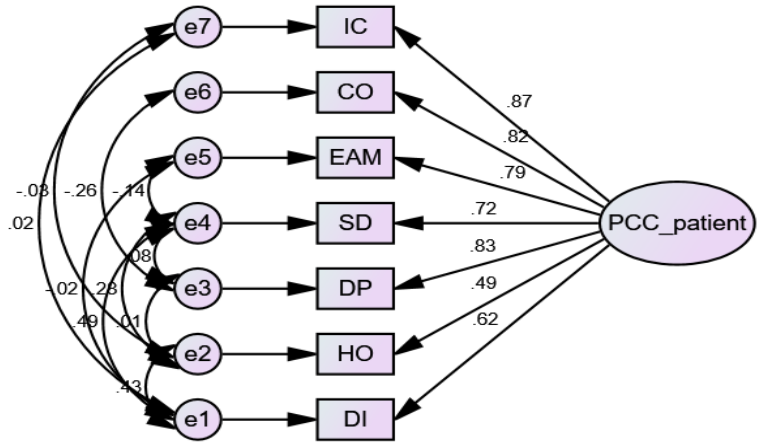

Chi-square = 7.952, Chi-square/df = .994, df = 8, p = .438,
GFI = .998, AGFI= .987, CFI = 1.000, NFI = .999, TLI = 1.000
RMR = .008, RMSEA = .000

Figure of Configural invariance model of PCCDS-P version among large and small hospital

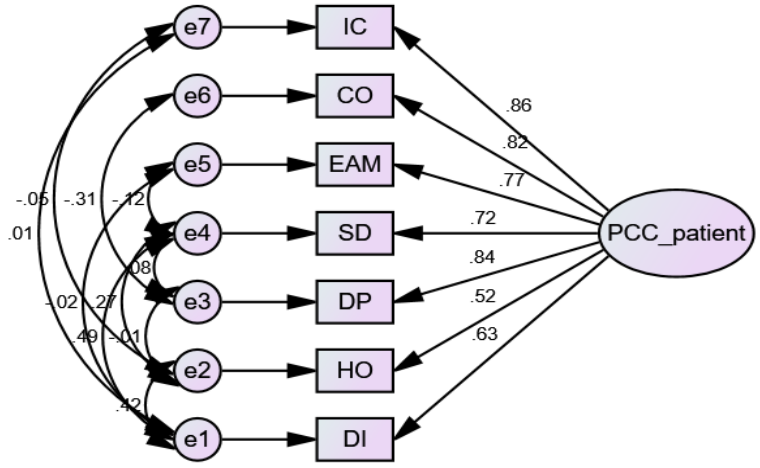

Chi-square = 16.401, Chi-square/df = 1.172, df = 14, p = .290,
GFI = .996, AGFI= .984, CFI = 1.000, NFI = .997, TLI = .999
RMR = .029, RMSEA = .012

Figure of Metric invariance model of PCCDS-P version among large and small hospital

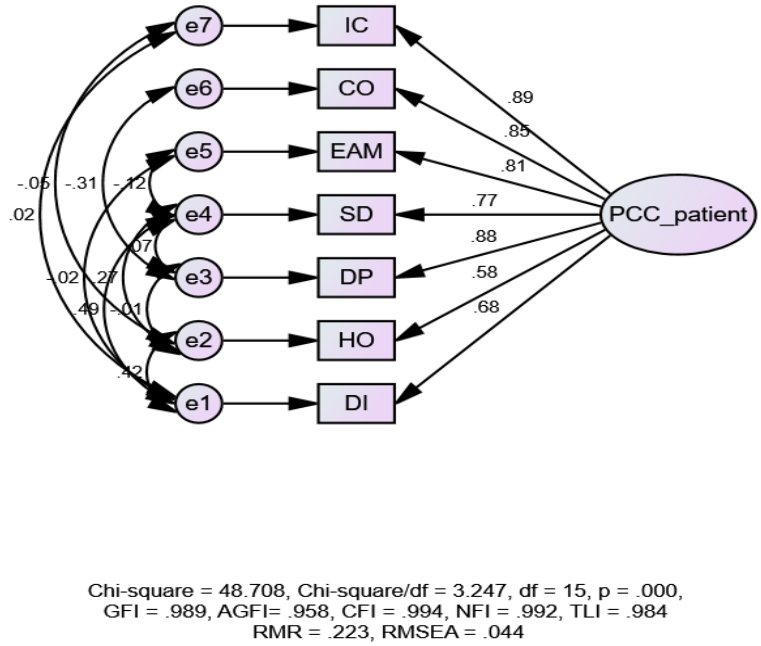

Figure of Scalar invariance model of PCCDS-P version among large and small hospital

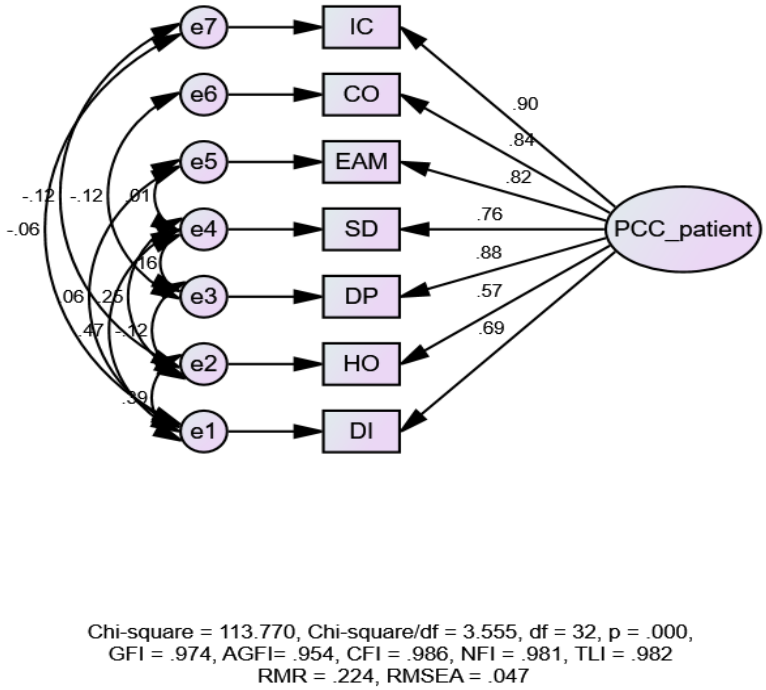

Figure Residual invariance model of PCCDS-P version among large and small hospital

Figures of multilevel constrained parameters measurement models PCCDS-D version.

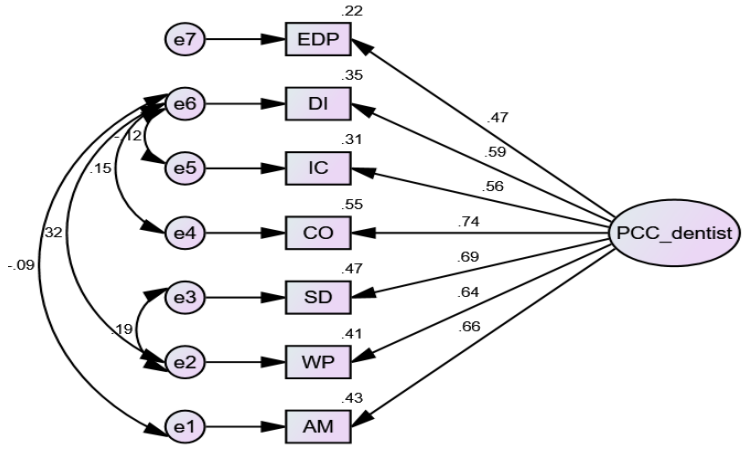

Chi-square = 7.226, Chi-square/df = .803, df = 9, p = .614, GFI = .993
CFI = 1.000, RMR = .010, RMSEA = .000, NFI = .989, TLI = 1.007

Figure of Measurement model of PCCDS-D version of large hospital only

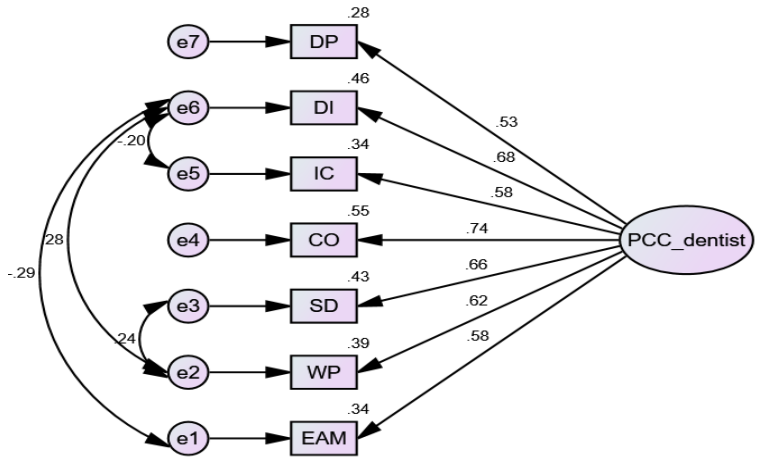

Chi-square = 6.030, Chi-square/df = .603, df = 10, p = .813, GFI = .994, AGFI= .984,
CFI = 1.000, RMR = .009, RMSEA = .000, NFI = .990, TLI = 1.014

Figure of Measurement model of PCCDS-D version of small hospital only

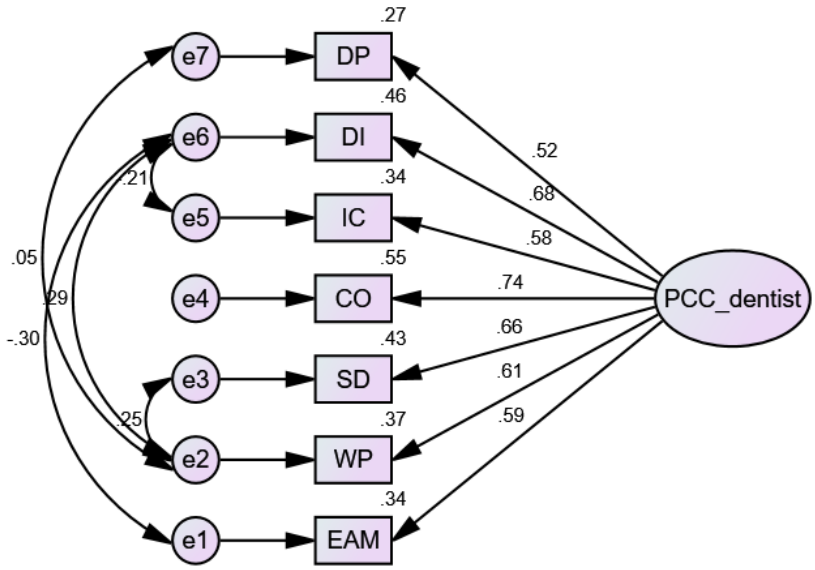

Chi-square = 15.278, Chi-square/df = .849, df = 18, p = .643, GFI = .994, AGFI= .982,
CFI = 1.000, RMR = .010, RMSEA = .000, NFI = .990, TLI = 1.004

Figure Configural invariance model of PCCDS-D version among large and small hospital

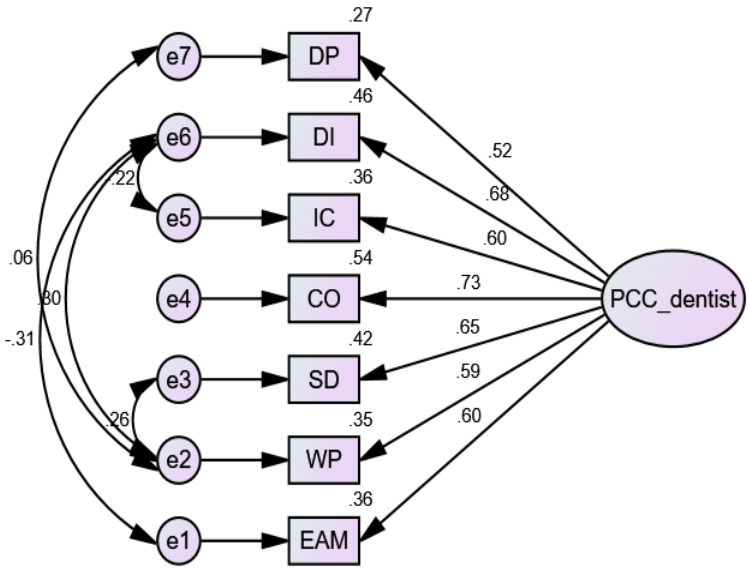

Chi-square = 16.022, Chi-square/df = .668, df = 24, p = .887, GFI = .994, AGFI= .986,
CFI = 1.000, RMR = .011, RMSEA = .000, NFI = .990, TLI = 1.009

Figure of Metric invariance model of PCCDS-D version among large and small hospital

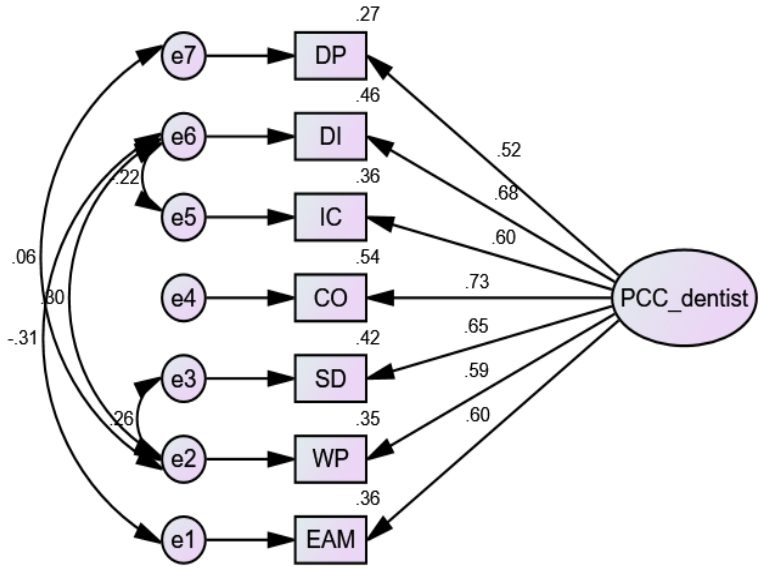

Chi-square = 16.039, Chi-square/df = .642, df = 25, p = .914, GFI = .994, AGFI= .986,
CFI = 1.000, RMR = .011, RMSEA = .000, NFI = .990, TLI = 1.010

Figure Scalar invariance model of PCCDS-D version among large and small hospital

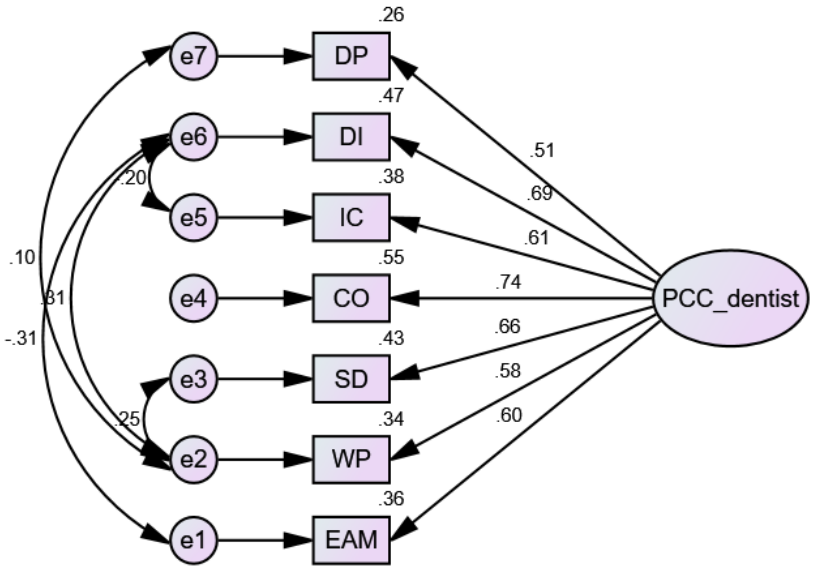

Chi-square = 21.086, Chi-square/df = .570, df = 37, p = .983, GFI = .992, AGFI= .988,
CFI = 1.000, RMR = .014, RMSEA = .000, NFI = .987, TLI = 1.012

Figure Residual invariance model of PCCDS-D version among large and small hospital

Appendix G

Assumption tests for Multiple Linear Regression analysis

MRA assumption tests of PCCDS-P version

Q-Q Plot

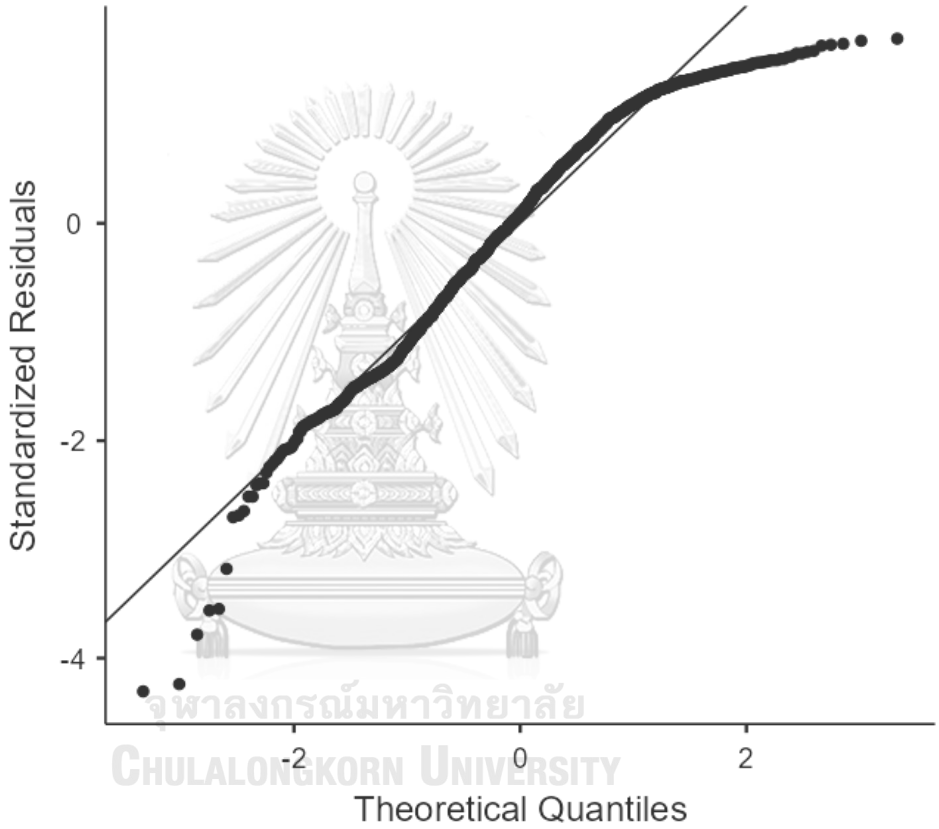

Normality Tests

	Statistic	p
Shapiro-Wilk	1.963	0 .041
Kolmogorov-Smirnov	1.603	0 .050
Anderson-Darling	9.47	0 .091

Note. Additional results provided by *moretests*

Heteroskedasticity Tests

	Statistic	p
Breusch-Pagan	41.1	< .001
Goldfeld-Quandt	0.944	0.754
Harrison-McCabe	0.519	0.842

Note. Additional results provided by *moretests*

Durbin–Watson Test for Autocorrelation

Autocorrelation	DW Statistic	p
0.0191	1.96	0.374

MRA assumption tests of PCCDS-D version

Q-Q Plot

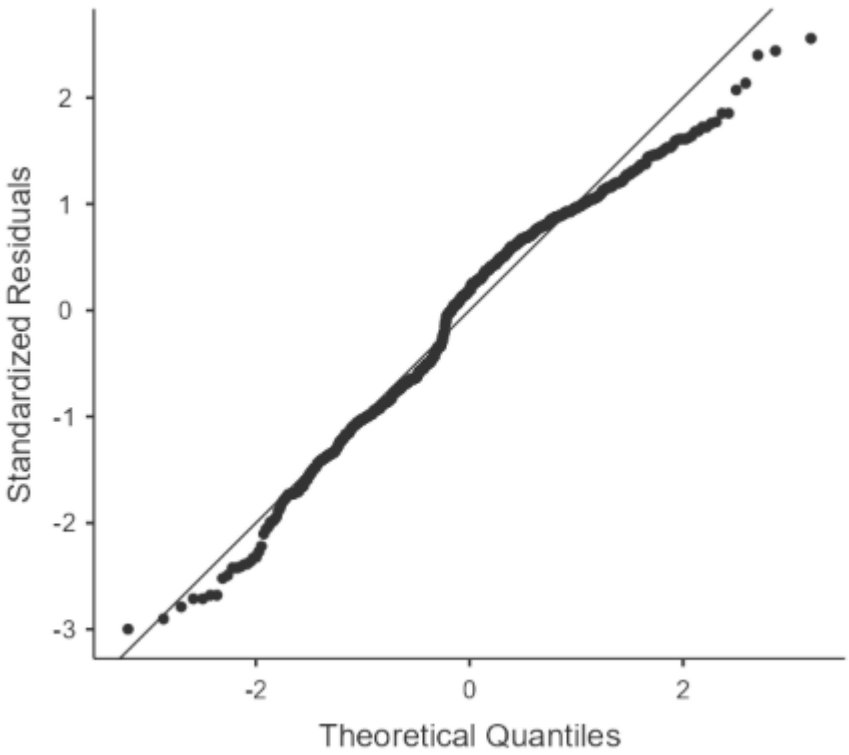

Heteroskedasticity Tests

	Statistic	p
Breusch-Pagan	36.3	< .001
Goldfeld-Quandt	1.10	0.183
Harrison-McCabe	0.477	0.209

Note. Additional results provided by *moretests*

Normality Tests

	Statistic	p
Shapiro-Wilk	1.974	0 .061
Kolmogorov-Smirnov	1.894	0 .061

Anderson-Darling	7.51	0 .051

Note. Additional results provided by *moretests*

Durbin–Watson Test for Autocorrelation

Autocorrelation	DW Statistic	p
0.191	1.36	0.074

Appendix H-1

Patient-Centered Care of Dentist Scale (PCCDS-P version)

แบบสอบถาม

เรื่อง การดูแลผู้ป่วยแบบยึดผู้ป่วยเป็นศูนย์กลางของทันตแพทย์

ในหน่วยบริการปฐมภูมิ (สำหรับผู้รับบริการทันตกรรม)

คำชี้แจง

แบบสอบถามฉบับนี้ประกอบด้วย 2 ส่วนดังนี้

ส่วนที่ 1 ข้อมูลส่วนบุคคล

ส่วนที่ 2 การดูแลผู้ป่วยแบบยึดผู้ป่วยเป็นศูนย์กลางของทันตแพทย์

ส่วนที่ 1 ข้อมูลส่วนบุคคล

คำชี้แจง โปรดขีดเครื่องหมาย ✓ ลงในช่อง ☐ หน้าข้อความ หรือกรอกข้อมูลที่ตรงกับความเป็นจริงของท่าน

1. เพศ ☐ ชาย ☐ หญิง

2. อายุ .....ปี (เกิน 6 เดือนให้นับเป็น 1 ปี)

3. ระดับการศึกษาสูงสุด

☐ ประถมศึกษา ☐ มัธยมศึกษา ☐ ปริญญาตรีหรือสูงกว่า

3. สิทธิการรักษาของท่านคือ

☐ สิทธิเบิกได้ข้าราชการ/จ่ายตรง/ต้นสังกัด/ท้องถิ่น

☐ ประกันสังคม

☐ บัตรประกันสุขภาพถ้วนหน้า (บัตรทอง)

☐ อื่นๆ ระบุ.....

4. โดยเฉลี่ย ในระยะ 2 ปี ท่านมาใช้บริการที่ รพ. หรือ รพ.สต. บ่อยแค่ไหน (ในสภาวะปกติ ไม่คำนึงถึง โรคโควิด-19 ที่ห้ามการเดินทาง)

☐ 2 ครั้ง ☐ ตั้งแต่ 3 ครั้งขึ้นไป

ส่วนที่ 2 การรับรู้ในการดูแลแบบยึดผู้ป่วยเป็นศูนย์กลางของทันตแพทย์

คำชี้แจง ให้ท่านระบุความความถี่ **<u>พฤติกรรมหรือผลของพฤติกรรมของทันตแพทย์ที่ปฏิบัติต่อท่าน</u>** ตามความเป็นจริง ที่ผ่านมาทุกครั้งและรวมครั้งนี้ เมื่อท่านมารับบริการที่**<u>หน่วยบริการนี้</u>** แบบสอบถามเป็นแบบมาตรวัดประมาณค่า 5 ระดับ ดังนี้

ความถี่ของพฤติกรรมหรือผลของพฤติกรรมของทันตแพทย์ที่ปฏิบัติต่อท่าน
5 หมายถึง ทำมากที่สุดหรือทุกครั้ง (81-100%)

4 หมายถึง ทำบ่อยครั้ง (61-80%)
3 หมายถึง ทำบ้าง (41-60%)
2 หมายถึง ไม่ค่อยได้ทำ (21-40%)
1 หมายถึง ทำน้อยที่สุดหรือไม่ได้ทำ (0-20%)

พฤติกรรมหรือผลของพฤติกรรมของทันตแพทย์ที่ปฏิบัติต่อท่าน	**ความถี่พฤติกรรมของทันตแพทย์**				
	5	4	3	2	1
1. ทันตแพทย์สอบถามถึงการใช้ชีวิต ทั่วๆไป เช่น บ้านอยู่ที่ไหน การทำงาน การศึกษา ครอบครัว เพื่อนๆ การดำเนินชีวิตทั่วๆไป รวมทั้ง ศาสนา และความเชื่อ ของข้าพเจ้า					
2. ทันตแพทย์นำข้อมูลทั่วไปของข้าพเจ้า ตามข้อ มาประกอบในการการ 1 ดูแลรักษาข้าพเจ้า					
3. ทันตแพทย์ ตอบสนองต่อความต้องการ และความคิดเห็นเกี่ยวกับสุขภาพปากและฟันของข้าพเจ้า					
4. ทันตแพทย์สอบถามถึงปัญหา ข้อจำกัด หรืออุปสรรค ที่เกี่ยวข้องกับกระบวนการในการรักษาฟันของข้าพเจ้า เช่น โรคประจำตัว การมีเวลาจำกัด ค่าใช้จ่าย การเดินทาง ของข้าพเจ้า					
5. ทันตแพทย์นำข้อจำกัดต่างๆ ของข้าพเจ้า เช่น โรคประจำตัว เวลาที่มีจำกัด ค่าใช้จ่าย การเดินทาง มาพิจารณาในการวางแผนการรักษาข้าพเจ้า					
6. ทันตแพทย์เปิดโอกาสให้ได้เล่าถึงความคิดของข้าพเจ้าเองว่า ป่วยเป็นอะไร					
7. ทันตแพทย์เปิดโอกาสให้ข้าพเจ้าเล่าถึงความรู้สึกกังวลต่อความเจ็บป่วย					

พฤติกรรมหรือผลของพฤติกรรมของทันตแพทย์ที่ปฏิบัติต่อท่าน	ความถี่พฤติกรรมของทันตแพทย์				
	5	4	3	2	1
ในช่องปาก					
8. ทันตแพทย์สอบถามถึงผลกระทบของการเจ็บป่วยในช่องปากต่อการดำเนินชีวิตประจำวัน หรือ การทำงาน หรือการเรียนของข้าพเจ้า					
9. ทันตแพทย์เปิดโอกาสให้ข้าพเจ้าได้บอกถึงความคาดหวังต่อการมารับการรักษาครั้งนี้ เช่น คาดว่าจะได้รับฟันปลอมใหม่ที่สวยๆ ไม่แพง เป็นต้น					
10. เพราะการดูแลและอธิบายของทันตแพทย์ทำให้ ข้าพเจ้าทราบดีว่าผลการรักษาที่จะเกิดขึ้นนั้นเป็นผลของการร่วมมือในการดูแลตัวข้าพเจ้าเอง และทันตแพทย์ที่ให้การรักษา					
11. ทันตแพทย์ให้ข้าพเจ้า) และญาติ ในบางกรณี (มีส่วนร่วมในการตัดสินใจร่วมกัน ในการเลือกการรักษาที่เหมาะสมกับข้าพเจ้า					
12. ทันตแพทย์เปิดโอกาสให้ข้าพเจ้า) และญาติ ในบางกรณี (ได้ร่วมกำหนดเป้าหมายการรักษาร่วมกับทันตแพทย์					
13. ทันตแพทย์ได้อธิบายแผนและขั้นตอนการรักษา รวมถึงระยะเวลารักษาอย่างละเอียด					
14. ทันตแพทย์ได้อธิบายถึง ข้อดี ข้อเสีย ค่าใช้จ่าย ทางเลือกในการรักษา ผลที่อาจเป็นไปได้ของการรักษา					
15. ข้าพเจ้าไม่เคยกังวลใดๆ เลย เมื่อสุขภาพช่องปากและฟันของข้าพเจ้ามาอยู่ในการดูแลของทันตแพทย์ที่นี่					
16. ทันตแพทย์ทำให้ข้าพเจ้าไว้วางใจในตัวทันตแพทย์					
17. ข้าพเจ้ามั่นใจว่าจะสามารถดูแล รักษาสุขภาพช่องปากของข้าพเจ้าได้เองอย่างเหมาะสม เมื่อได้รับการดูแลจากทันตแพทย์ที่นี่					
18. ทันตแพทย์ดูแลข้าพเจ้าดี ทำให้ข้าพเจ้าจะกลับมารักษาที่นี่เป็นประจำ					
19. ทันตแพทย์มีอารมณ์ปกติดี และกระตือรือร้นขณะให้บริการข้าพเจ้า					
20. ทันตแพทย์สามารถจัดการกับอารมณ์ของตนเองได้ดี แม้ในสถานการณ์ที่ยุ่งยากเกี่ยวกับการดูแลข้าพเจ้า หรือผู้ป่วยคนอื่นๆ					
21. เมื่อข้าพเจ้าเล่าประวัติความเจ็บป่วย ความกังวล ความคิดเห็นต่อการเจ็บป่วยของข้าพเจ้าให้ทันตแพทย์ทราบ ข้าพเจ้าคิดว่าทันตแพทย์เข้าใจ					

พฤติกรรมหรือผลของพฤติกรรมของทันตแพทย์ที่ปฏิบัติต่อท่าน	ความถี่พฤติกรรมของทันตแพทย์				
	5	4	3	2	1
และมองเห็นความเจ็บป่วยได้ในมุมมองเดียวกับข้าพเจ้า					
22. ทันตแพทย์แสดงความรู้สึกเห็นอกเห็นใจต่อข้าพเจ้าอย่างชัดเจน แม้วิธีการหรือขั้นตอนในการดูแลรักษาข้าพเจ้า จะยุ่งยากซับซ้อน					
23. ภายหลังการทำฟัน ทันตแพทย์ได้สอบถาม หรือเปิดโอกาสให้ข้าพเจ้าบอกเล่าความรู้สึก ความคิดเห็นต่อการรักษา					
24. ข้าพเจ้าจะได้รับการเตือนทุกครั้ง ก่อนที่ทันตแพทย์จะลงมือทำฟันที่อาจทำให้ข้าพเจ้าเจ็บหรือเสียวมาก เช่น เริ่มฉีดยาชา เริ่มกรอฟัน เมื่อจะงัดฟันแรงๆ หรือขยับเก้าอี้ทำฟันขึ้นลงเร็วๆ เป็นต้น					
25. ข้าพเจ้าได้รับการสอบถามความรู้สึกเจ็บปวดจากทันตแพทย์ ขณะให้บริการทำฟันอยู่เป็นระยะๆ					
26. ทันตแพทย์ มักกล่าวทักทาย อย่างเป็นมิตร					
27. ทันตแพทย์ให้เวลาข้าพเจ้าอย่างเพียงพอในการเล่าอาการ และประวัติความเจ็บป่วย					
28. ทันตแพทย์ตั้งใจฟัง สบตา และมองข้าพเจ้า มากกว่ามองเอกสารหรือจอคอมพิวเตอร์ และแสดงท่าทีสนใจในคำบอกเล่าอาการของข้าพเจ้า					
29. ทันตแพทย์อธิบาย หรือพูดคุย ด้วยภาษาที่เข้าใจได้ง่าย ไม่ใช้ศัพท์ทางการแพทย์มากเกินไป					
30. ทันตแพทย์ใช้อุปกรณ์ หรือสื่อต่างๆ เช่นแผ่นพับ รูปภาพ วิดีโอ หรือให้ดูฟิล์ม เอ็กซเรย์ ประกอบการวินิจฉัย การรักษาโรค หรือการให้คำแนะนำต่างๆ หลังการรักษา					
31. ทันตแพทย์สอบถามข้าพเจ้าว่ามีข้อสงสัย มีคำถาม หรือไม่เข้าใจจุดไหน					
32. ทันตแพทย์ตรวจช่องปากครอบคลุมทุกส่วนในช่องปาก เพื่อเป็นการประเมินสุขภาพช่องปากและฟันให้ข้าพเจ้า ไม่เฉพาะบริเวณฟันหรือเหงือกตำแหน่งที่ข้าพเจ้ามีปัญหาเท่านั้น					
33. เพราะทันตแพทย์อธิบายข้าพเจ้าจึงเข้าใจว่า สุขภาพปากและฟันของข้าพเจ้าเชื่อมโยงกับสุขภาพทางกาย					
34. ข้าพเจ้าสนใจที่จะดูแลรักษาสุขภาพช่องปากของตนเองมากขึ้น เมื่อมารับบริการที่นี่ เพราะทันตแพทย์แนะนำ เช่น ข้าพเจ้าแปรงฟันด้วยยาสี					

พฤติกรรมหรือผลของพฤติกรรมของทันตแพทย์ที่ปฏิบัติต่อท่าน	ความถี่พฤติกรรมของทันตแพทย์				
	5	4	3	2	1
ฟันผสมฟลูออไรด์ สม่ำเสมอ และก่อนนอนข้าพเจ้าลดการบริโภค , อาหารหวาน น้ำอัดลม ลูกอมต่างๆ					
35. การประสานงานระหว่างทันตแพทย์ กับทันตแพทย์ด้วยกัน หรือกับเจ้าหน้าที่ในแผนกทันตกรรม มีความราบรื่น สะดวกสบาย รวดเร็ว					
36. ทันตแพทย์ประสานการทำงานกับแผนกอื่นๆ เช่น เช่น ห้องบัตร ห้องจ่ายยา ห้องเก็บเงิน หรือห้องตรวจโรค ด้วยการยึดประโยชน์ผู้ป่วยเป็นหลัก					
37. ทันตแพทย์นัดหมายเพื่อมารับการรักษาหรือติดตามการรักษาอย่างต่อเนื่อง ตามความจำเป็น					
38. ถ้ามีการเปลี่ยนทันตแพทย์อีกคนหนึ่งของที่นี่มาให้การรักษาต่อ ทันตแพทย์คนใหม่ สามารถให้รักษาต่อเนื่องไปได้อย่างราบรื่น เช่น ไม่ต้องตรวจเริ่มต้นใหม่เพราะมีข้อมูลสื่อสารระหว่างทันตแพทย์คนเก่าและคนใหม่แล้ว(ถ้าไม่มีประสบการณ์นี้ให้ คาดการณ์และให้คะแนน)					
39. เมื่อรักษาโรค หรืออาการที่มีหายแล้ว ทันตแพทย์แนะนำให้กลับมาตรวจเช็คสุขภาพช่องปาก อย่างสม่ำเสมอ					
40. ข้าพเจ้าได้รับบริการตรงเวลานัด					
41. ข้าพเจ้าได้รับบริการครบทุกอย่างตามที่ทันตแพทย์ตรวจพบและได้ตกลงร่วมกันกับข้าพเจ้า					
42. ข้าพเจ้าพบว่า การขอพบหรือนัดหมายทันตแพทย์ ทำได้สะดวก					

Appendix H-2

Patient-Centered Care of Dentist Scale (PCCDS-D version)

แบบสอบถาม

เรื่อง การดูแลผู้ป่วยแบบยึดผู้ป่วยเป็นศูนย์กลางของทันตแพทย์ในหน่วยบริการปฐมภูมิ

(สำหรับทันตแพทย์)

คำชี้แจง

แบบสอบถามฉบับนี้ประกอบด้วย 2 ส่วนดังนี้

ส่วนที่ 1 ข้อมูลส่วนบุคคล

ส่วนที่ 2 การดูแลผู้ป่วยแบบยึดผู้ป่วยเป็นศูนย์กลางของทันตแพทย์

ส่วนที่ 1 ข้อมูลส่วนบุคคล

คำชี้แจง โปรดขีดเครื่องหมาย ✓ ลงในช่อง ☐ หน้าข้อความ หรือกรอกข้อมูลที่ตรงกับความเป็นจริงของท่าน

1. เพศ ☐ ชาย ☐ หญิง
2. ประสบการณ์ทำงาน .....ปี (เกิน 6 เดือนให้นับเป็น 1 ปี)
3. การศึกษาเฉพาะทาง (ระยะเวลาการศึกษา ตั้งแต่ 1 ปีขึ้นไป)

   ☐ มี ☐ ไม่มี
4. สังกัดโรงพยาบาลชุมชนระดับใด

   ☐ F3 ☐ F2 ☐ F1 ☐ M2
5. จำนวนผู้ป่วยที่ให้บริการเฉลี่ยต่อวันทั้งในเวลาและนอก) คน.....

   (เวลาราชการในหน่วยบริการที่ท่านสังกัดนี้เท่านั้น
6. จำนวนทันตแพทย์ในโรงพยาบาล.....คน
7. ในปัจจุบันท่านออกให้บริการที่ รพ หรือ หน่วยบริการปฐมภูมิ ด้วยหรือไม่ .สต.

   ☐ โดยเฉลี่ย -35 ครั้งต่อ สัปดาห์ ☐ โดยเฉลี่ย 1-2 ครั้งต่อสัปดาห์

   ☐ โดยเฉลี่ยเดือนละ 1 ครั้ง ☐ โดยเฉลี่ยน้อยกว่า 1 ครั้งต่อเดือน

   ☐ ไม่ออก

ส่วนที่ 2 การดูแลแบบยึดผู้ป่วยเป็นศูนย์กลางของทันตแพทย์

คำชี้แจง ให้ท่านระบุ **พฤติกรรมของท่านหรือสิ่งที่ท่านคำนึงถึงหรือรับรู้ได้ขณะให้บริการผู้ป่วย** ตามความเป็นจริง

ความถี่ของพฤติกรรมที่ท่านปฏิบัติ
5 หมายถึง ทำมากที่สุดหรือทุกครั้ง (81-100%)
4 หมายถึง ได้ทำบ่อยครั้ง (61-80%)
3 หมายถึง ได้ทำบ้าง (41-60%)
2 หมายถึง ไม่ค่อยได้ทำ (21-40%)
1 หมายถึง ทำน้อยที่สุดหรือไม่ได้ทำ (0-20%)

พฤติกรรมของท่านหรือสิ่งที่ท่านคำนึงถึงหรือรับรู้ได้ขณะให้บริการผู้ป่วย	**ความถี่ของพฤติกรรมที่ท่านปฏิบัติ**				
	5	4	3	2	1
1. ท่านเปิดโอกาสให้ผู้ป่วยได้บอกความต้องการ หรือความคิดเห็นเกี่ยวกับสุขภาพปากและฟัน					
2. ท่านตอบสนองต่อความต้องการ และความคิดเห็นเกี่ยวกับสุขภาพปากและฟันของผู้ป่วย โดยยึดหลักการดูแลผู้ป่วยแบบองค์รวม					
3. ท่านสอบถามและค้นหาถึงปัญหา ข้อจำกัด อุปสรรค หรือความคิดความเชื่อที่อาจเกี่ยวข้องกับสุขภาพและกระบวนการในการรักษาของผู้ป่วย เช่น การมีเวลาจำกัด ค่าใช้จ่าย การเดินทาง ความคิดว่าฟันต้องหลุดไปเองเมื่อแก่ตัวลง โทษเวรกรรมที่เป็นโรคนี้ เป็นต้น					
4. ท่านนำข้อจำกัดต่างๆ และความคิดความเชื่อนั้นของผู้ป่วย เช่น โรคประจำตัว เวลาที่มีจำกัด ค่าใช้จ่าย การเดินทาง มาพิจารณาในการวางแผนการรักษา					

พฤติกรรมของท่านหรือสิ่งที่ท่านคำนึงถึงหรือรับรู้ได้ ขณะให้บริการผู้ป่วย	ความถี่ของพฤติกรรมที่ท่านปฏิบัติ				
	5	4	3	2	1
5. โดยทั่วไป ท่านได้พยายามสืบค้นถึง สาเหตุของการเจ็บป่วย ไม่เพียงแต่ ตรวจในช่องปากแต่สอบถามถึงสาเหตุอื่นๆ ร่วมด้วย เช่น ลักษณะการกิน การเคี้ยว ภาวะทางจิตใจ ความเครียด หรือความคิดความเชื่อที่อาจเกี่ยวข้องกับสุขภาพ					
6. ท่านได้สอบถามผู้ป่วยว่า ผู้ป่วยคิดว่าตนเองป่วยเป็นอะไร					
7. โดยทั่วไป ท่านได้สอบถามลึกลงไปถึงความกังวล ความไม่สบายใจ ต่อความเจ็บป่วยในช่องปากของผู้ป่วย					
8. ท่านสอบถามถึงผลกระทบของการเจ็บป่วยในช่องปากต่อการดำเนินชีวิตประจำวัน หรือ การทำงาน หรือการเรียนของผู้ป่วย					
9. ท่านสอบถามถึงความคาดหวังของผู้ป่วยต่อการมารับการรักษาครั้งนี้					
10. ท่านได้ให้ผู้ป่วย (และญาติ ในบางกรณี) มีส่วนร่วมในการตัดสินใจ ในการเลือกการรักษาที่เหมาะสมกับผู้ป่วย					
11. ท่านเปิดโอกาสให้ผู้ป่วย (และญาติ ในบางกรณี) ได้ร่วมกำหนดเป้าหมายการรักษาร่วมกันกับท่าน					
12. ท่านได้อธิบายแผนและขั้นตอนการรักษา รวมถึงระยะเวลารักษาอย่างละเอียด					
13. ท่านได้อธิบายถึง ข้อดี ข้อเสีย ค่าใช้จ่าย ทางเลือกในการรักษา ผลที่อาจเป็นไปได้ของการรักษา					
14. ท่านให้การดูแลผู้ป่วยด้วยความเคารพในศักดิ์ศรี และให้เกียรติผู้ป่วยและญาติ					
15. การมองผู้ป่วยด้วยความเป็นมนุษย์หรือความเป็นคนที่เท่าเทียมกัน ถือเป็นหลักที่ท่านคำนึงถึงสูงสุดเมื่อให้บริการผู้ป่วย					
16. ท่านแสดงให้ผู้ป่วยไว้วางใจในตัวท่าน					
17. ท่านให้บริการด้วยท่าทีที่เหมาะสม ไม่ใช้อารมณ์ขณะให้บริการ					
18. ท่านแสดงท่าทีที่เห็นอกเห็นใจผู้ป่วย					
19. เมื่อผู้ป่วยเล่าประวัติความเจ็บป่วย ความกังวล ความคิดเห็นต่อการเจ็บป่วยของเขาให้ท่านทราบ ท่านเข้าใจและมองเห็นความเจ็บป่วยหรือความกังวลได้ในมุมมองเดียวกับผู้ป่วย					

พฤติกรรมของท่านหรือสิ่งที่ท่านคำนึงถึงหรือรับรู้ได้ ขณะให้บริการผู้ป่วย	ความถี่ของพฤติกรรมที่ท่านปฏิบัติ				
	5	4	3	2	1
20. ท่านมีความอดทนและใจเย็น แม้มีความยุ่งยากในการให้การดูแลรักษาผู้ป่วย					
21. ท่านได้สอบถามความรู้สึกเจ็บปวด ขณะให้บริการทำฟันอยู่เป็นระยะๆ					
22. ท่านเตือนทุกครั้ง ก่อนที่ท่านจะลงมือทำฟันที่อาจทำให้ผู้ป่วยเจ็บหรือเสียวมาก เช่น เริ่มฉีดยาชา เริ่มกรอฟัน เมื่อจะงัดฟันแรงๆ หรือขยับเก้าอี้ทำฟันขึ้นลงเร็วๆ เป็นต้น					
23. ท่านให้เวลาผู้ป่วยอย่างเพียงพอในการเล่าอาการ และประวัติความเจ็บป่วย					
24. ท่านตั้งใจฟัง สบตา มองผู้ป่วย มากกว่ามองเอกสารหรือจอคอมพิวเตอร์ และแสดงท่าทีสนใจในคำบอกเล่าของผู้ป่วย					
25. ท่านอธิบาย หรือพูดคุย ด้วยภาษาที่เข้าใจได้ง่าย ไม่ใช้ศัพท์ทางการแพทย์มากเกินไป					
26. เมื่ออธิบายการวินิจฉัย แผนการรักษา คำแนะนำต่างๆ แล้วท่านสอบถามผู้ป่วยอีกครั้งว่ามีข้อสงสัย มีคำถาม หรือไม่เข้าใจจุดไหน					
27. โดยทั่วไปแล้ว ท่านสังเกตุ ท่าที การแสดงออก และอวจนภาษา ของผู้ป่วย ขณะ ซักประวัติ พูดคุยให้คำปรึกษา ทั้งขณะทำฟัน ก่อนและหลังบริการ					
28. เมื่อสังเกตเห็นท่าที และ อวจนภาษาของผู้ป่วย ที่แสดงออกถึง ความอึดอัดหรือกังวล หรือสงสัย หรืออื่นๆ ท่านตอบสนองอย่างเหมาะสม เช่น ท่านพูดให้คลายกังวล หรือทวนสอบความเข้าใจสิ่งที่อธิบาย					
29. ท่านได้แนะนำวิธีการดูแลสุขภาพปากและฟัน เช่น วิธีแปรงฟัน วิธีใช้ไหมขัดฟัน ยาสีฟันที่เหมาะสม อาหารที่ควรหลีกเลี่ยง เป็นต้น					
30. เมื่อมีกรณีจำเป็น ที่ต้องประสานงานกับแผนกอื่นๆ ท่านมีความพยายามในการประสานเพื่อให้ผู้ป่วยได้รับการดูแลที่ดีที่สุด ด้วยยึดหลักผู้ป่วยเป็นศูนย์กลาง แม้บางครั้งไม่ได้ทำตามแนวทางที่กำหนดไว้บ้าง					
31. ท่านทำงานประสานกับคนอื่นๆ ด้วยคำนึงถึงการมุ่งเน้นผู้ป่วยเป็นศูนย์กลาง					

พฤติกรรมของท่านหรือสิ่งที่ท่านคำนึงถึงหรือรับรู้ได้ ขณะให้บริการผู้ป่วย	ความถี่ของพฤติกรรมที่ท่านปฏิบัติ				
	5	4	3	2	1
32. ท่านนัดหมายผู้ป่วยเพื่อมารับการรักษาอย่างต่อเนื่อง หรือติดตามการรักษาตามความจำเป็นของโรคหรือหัตถการ					
33. เมื่อต้องส่งต่อผู้ป่วยไปรับการรักษาต่อกับทันตแพทย์ท่านอื่นทั้งในและนอกหน่วยงาน ท่านจะบันทึกข้อมูลอย่างละเอียด เตรียมเอกสารที่จำเป็น เช่น การระบุตำแหน่งที่ชัดเจน การวาดรูปประกอบ ฟิลม์หรือไฟล์ x-ray, โมเดลฟัน เป็นต้น					
34. ท่านให้บริการผู้ป่วยได้ครบชนิดงาน ตามความจำเป็นของผลการตรวจและได้ตกลงและแจ้งผู้ป่วยไว้ ในครั้งนั้นๆ					
35. เมื่อผู้ป่วยมีความจำเป็นต้องการพบท่าน ท่านให้ผู้ป่วยเข้าถึงหรือขอพบท่านได้สะดวก					
36. ท่านพิจารณาดูแลให้ผู้ป่วยกลุ่มเปราะบาง เช่น ผู้พิการ ผู้สูงอายุ เด็กขาดผู้ดูแล คนไร้สิทธิ เป็นต้น ได้เข้ารับบริการอย่างสะดวก และเหมาะสม					

Appendix I

List of the experts for content validity test.

1.	Dr. Sirichai Namtatsanee	M.D. M.Sc., Family medicine expert, Director of Kuchinarai Crown Prince Hospital
2.	Assoc. Prof. Dr. Neeracha Sanchawanakul	DDS., Ph.D. Oral biologist expert, General practitioner
3.	Assist. Prof. Dr. Natthawut Kaewsutha	DDS., Ph.D., Dean of Faculty of dentistry, Srinakarinwiroj University and Dental public health experts
4.	Assist. Prof. Dr. Songwuth Taugratanapan	DDS., Ph.D., Dental public health Experts, Chiangmai University
5.	Asist. Prof. Dr. Supawadee Naorungroj	DDS., Ph.D., Operative Dentistry expert, Prince of Songkla University

VITA

NAME	Yutthana Khamnil
DATE OF BIRTH	1 July 1970
PLACE OF BIRTH	Bangkok
INSTITUTIONS ATTENDED	Doctor of Dental Surgery, Faculty of Dentistry, Chulalongkorn University Master of Science, Faculty of Commerce and Accountancy, Chulalongkorn University Master of Public Health, School of Health Sciences, Sukhothai Thammathirat Open University
HOME ADDRESS	19 Soi Charoenkrung 67 Yannawa Sathorn Bangkok 10120
PUBLICATION	Khamnil Y. Effectiveness of Silver Fluoride for Caries Arrest in Primary Teeth of Children in Public Child Center in Phrasamutjedi District, Samutprakarn Province. Thailand Journal of Health Promotion and Environmental Health. 2016;8:44–53. Khamnil Y, Prasertsom P, Pochnukool N. Relationship between oral health status and oral health-related quality of life of manufactory workers in Phrasamutjedi district Samutprakarn province. Thailand Journal of Health Promotion and Environmental Health. 2018;1–13.